FUNDING REIMBURSEMENT AGREEMENT

SONOMA-MARIN AREA RAIL TRANSIT DISTRICT AND COUNTY OF SONOMA

THIS REIMBURSEMENT AGREEMENT ("Agreement") is entered into as of _____, by and between the **SONOMA-MARIN AREA RAIL TRANSIT DISTRICT** (District), a public entity duly established under the laws of California, and the **COUNTY OF SONOMA** (County), a political subdivision of the State of California.

Recitals

A. The SMART rail corridor, historically known as the Northwestern Pacific Railroad Authority (NWPRA), generally parallels Highway 101 running north-south in Sonoma and Marin Counties. The corridor is owned by the District from Milepost (MP) 68.22 in Healdsburg southward to MP 11.4 in Corte Madera.

B. District is proceeding with design and construction of passenger rail service and accompanying multi use path along an approximately 70-mile existing rail corridor extending from Cloverdale in Sonoma County, California, to a location near the ferry terminal in Larkspur, Marin County, California.

C. The County desires to construct Airport Boulevard roadway improvements from Aviation Boulevard to Regional Parkway (the "County Work"). "County Work" shall include all associated change orders and/or additional work, if any, as may be authorized as provided herein.

D. At the request of the County, the District is agreeable to constructing the improvements through its Design-Build Contract CV-DB-18-001.

E. The list of improvements/work is documented in Exhibit A that is incorporated and included as part of this Agreement.

F. The County agrees to pay for all design, construction and associated cost for the County Work.

Agreement

NOW, THEREFORE, for good and valuable consideration, the receipt and adequacy of which are hereby acknowledged, County and District agree as follows:

1. RECITALS

A. The above recitals are true and correct and are hereby incorporated in and expressly form a part of this Agreement.

2. COORDINATION

A. County shall coordinate the County Work with District's Chief Engineer or his designee, contact information for the parties' respective representatives is set forth below:

District	**County**
Bill Gamlen	Johannes J. Hoevertsz
Chief Engineer Sonoma Marin Area Rail Transit (SMART) 5401 Old Redwood Highway, Suite 200 Petaluma, CA 94954	Director of Transportation and Public Works County of Sonoma 2300 County Center Drive, Suite B100 Santa Rosa, CA 95403
Phone: 707.794.3330	Phone: 707.565.2231
Fax: 707.794.3037	Fax: 707.565.2620
Email: BGamlen@sonomamarintrain.org	Email: Johannes.Hoevertsz@sonoma-county.com

3. SCOPE OF WORK

A. Proposed Improvements/County Work. District shall contract for and cause the construction of Airport Boulevard roadway improvements from Aviation Boulevard to Regional Parkway. The improvements are described in detail in the plans included here as Exhibit A. All work shall be in strict conformance with the final plans and specifications (Construction Documents), subject to reasonable change orders and other construction-required modifications as approved by County. All work shall comply with County's applicable Road Construction Standards. The scope of work includes the widening of Airport Boulevard from Aviation Boulevard to Regional Parkway: demolition of conflicting existing infrastructure, paving activities, installation of new concrete curb, gutter, driveways, and sidewalk, installation of new street lights and associated conduits, relocation of bus stop, and installation of a new traffic signal including the interconnect into the railroad system.

B. Request for Additional Work.

1. Initiation Conference: The County may initiate a request for additional work to be covered under this Agreement. Such request shall be made in writing to SMART. The request shall include a description of the proposed work. Following receipt of the request, the parties shall meet to establish and agree on the following information:

   a. Project Manager Information (name, address, phone number, fax number, and email address).

   b. Project Information (project name, project area, location map).

   c. Project/task number.

   d. Account number.

   e. Time allowed to perform the work or Construction Schedule.

2. Agreement Memorandum. SMART will prepare an Agreement Memorandum setting forth the terms for the additional work as established during the Initiation Conference. The Agreement Memorandum will be executed by both parties prior to SMART's issuance of a written authorization to proceed.

4. DISTRICT'S RESPONSIBILITIES

District shall be responsible for the following:

A. Insurance and Indemnification: District shall require all contractors engaged in the County Work to insure, indemnify, and hold harmless the County to the same extent such contractors indemnify and hold harmless District as to the County Work and associated activities. District shall provide evidence of same upon request.

B. Contract Administration: District shall administer the construction contract for the County Work, at County's expense.

C. Final Plans, Specifications: The District, through its design-build contractor, will develop final plans and specifications (Construction Documents) for County Work.

D. Procurement. District has procured its Design-Build Contract CV-DB-18-001, in compliance with all applicable legal requirements pursuant to the Public Contract Code and District's design-build authority.

E. Prevailing Wages. District Design-Build Contract complies with prevailing wage requirements as provided for under District's Design-Build Contract CV-DB-18-001 and the Labor Code. Accordingly, District will cause all County Work to comply with the same applicable prevailing wage laws and regulations, including satisfying all obligations as an "awarding body" as defined by Labor Code section 1722.

F. Records. District shall maintain complete and accurate records of all transactions related to the County Work in compliance with generally accepted accounting principles. Such records shall be available to County at all reasonable times for inspection and analysis.

G. Notifications. District shall notify County in advance regarding the following, including any changes thereto: 1. Date of commencement of County Work construction; 2. All County Work construction working hours; and 3. All traffic control plans related to the County Work.

5. **COUNTY'S RESPONSIBILITIES**

County agrees to perform the following:

A. Payment: The County shall be responsible for all costs associated with the County Work, including, administration and any unknown or differing site condition costs or changes which could arise as part of constructing the County Work.

B. A budget has been prepared for the County Work and is incorporated herein as Exhibit B. The County shall reimburse District in accordance with Section 6 below.

C. Final Plans, Specifications: County shall review and approve 95 percent complete and final set of Project Plans and Specifications within twenty (20) calendar days of submittal. If County fails to approve or provide written comments on any of Project Plans within the review period, County shall be deemed to have approved such Project Plans. Approvals shall not be unreasonably withheld.

D. Changed Circumstances: During both the design and construction phases, should the County be notified of any potential changes or unforeseen conditions identified by District's Contractor, County shall promptly investigate the potential changes or unforeseen conditions for the County Work and if County finds that the circumstances differ or there is a changed or unanticipated condition County shall request, and District may provide a change proposal delineating the changed or unforeseen condition and an increase or decrease of costs, for County's approval.

E. Utilities: County shall resolve and provide coordination for public and private utilities to resolve any utility conflicts that may arise as part of constructing County Work, at County's sole cost and expense.

F. Right of Entry: County shall provide any County licenses or permits required for the County Work to the District's Contractor at no cost.

G. Inspection and Acceptance: The County shall review, inspect and approve construction activities related to construction of the County Work. County shall be responsible for all inspection and acceptance of the County Work, subject to District providing adequate notice and opportunity to conduct final and other inspections as appropriate for achieving final acceptance of the County Work. County may require reasonable final modifications and deliverables (i.e, "punch-list" requirements) of District, but in no event shall County direct the District's contractor. District will not issue final acceptance of the County Work without prior written acceptance from the County.

H. Title. Upon acceptance, all right, title, and interest in and to all County Work facilities, free and clear from any liens or encumbrances, shall vest with County.

6. **REIMBURSEMENT PROCEDURES**

Within 30 days of receipt of District's invoice, County shall reimburse District for the design and construction costs for the County Work, including reasonable construction contract administration costs incurred by District. The total reimbursement amount from County to District under this Agreement shall not exceed the total estimated costs set forth in Exhibit B plus the estimated costs for any additional work approved pursuant to Section 3.B(2) without the prior written approval of County.

7. **ADDITIONAL REQUIREMENTS**

A. Amendments to Agreement

This Agreement may be amended only by the mutual written consent of both parties.

B. Indemnification

Each party shall indemnify, defend, protect, hold harmless, and release the other, its officers, agents, and employees, from and against any and all claims, loss, proceedings, damages, causes of action, liability, costs, or expense (including attorneys' fees and witness costs') arising from any gross negligence of such indemnifying party in connection with the performance of this Agreement. This indemnification obligation shall not be limited in any way by any limitation of the amount or type of workers' compensation acts, disability benefit acts, or other employee benefit acts.

C. Termination

This Agreement shall terminate upon County's written acceptance of the County Work. Notwithstanding the foregoing, either party may terminate this Agreement by giving 30-days prior written notice to the other party, in the manner described in Section 7.D of this Agreement of its intent to terminate. In the event of termination by the County, County shall pay District for all cost and expenses for the proportion of County Work completed, along with any associated cost or claims arising from the termination of the County Work except to the extent of breach or violation by District or District's contractor. In the event of termination by District, District shall provide County with all plans, specifications, and other design and construction written work product for the County Work, in electronic format, sufficient to facilitate County completion of the County Work.

D. Notice

Unless otherwise requested by a party, all notices, demands, requests, consents or other communications which may be or are required to be given by either party to the other shall be in writing and shall be deemed effective upon service. Notices shall be deemed to have been properly given when served on the party to whom the same is to be given by hand delivery or by deposit in the United States mail addressed to the party as follows:

District: Bill Gamlen, P.E
Chief Engineer
Sonoma-Marin Area Rail Transit District
5401 Old Redwood Highway
Petaluma, CA 94954

County: Johannes J. Hoevertsz, P.E.
Director of Transportation and Public Works
County of Sonoma
2300 County Center Drive, Suite BIOO
Santa Rosa, CA 95403

When a notice is given by a generally recognized overnight courier service, the notice, invoice, or payment shall be deemed received on the next business day. When a notice or payment is sent via United States Mail, it shall be deemed received seventy-two (72) hours after deposit in the United States Mail, registered or certified, return receipt requested, with the postage thereon fully prepaid. In all other instances, notices, and payments shall be effective upon receipt by the recipient. Changes may be made in the names and addresses of the person to whom notices are to be given by giving notice pursuant to this paragraph.

E. Governing Law

This Agreement shall be governed by and construed in accordance with the laws of the State of California.

F. Entire Agreement

With regard to the County Work and matters covered by this Agreement, this instrument contains the entire agreement between the parties, and no statement, promise, or inducement made by either party or agents of the parties that is not contained in this written contract shall be valid or binding; and this contract may not be enlarged, modified, or altered except in writing signed by the parties.

G. Authority of County and District

The undersigned hereby represent and warrant that he or she has authority to execute and deliver this Agreement on behalf of County and District.

H. No Waiver of Breach

The waiver by any of the Parties of any breach of any term or promise contained in this Agreement shall not be deemed to be a waiver of such term or provision or any subsequent breach of the same or any other term or promise contained in this Agreement.

I. Time of Essence

Time is and shall be of the essence of this Agreement and every provision hereof.

J. No Third-Party Beneficiaries.

Nothing contained in this Agreement shall be construed to create and the parties do not intend to create any rights in third parties.

K. Unenforceable Provisions.

If a court of competent jurisdiction finds any provision of this Agreement to be illegal, invalid or unenforceable, the Parties agree that such provision will be enforced to the maximum extent permissible so as to effect the intent of the Parties, and the validity, legality and enforceability of the remaining provisions of this Agreement will not in any way be affected or impaired thereby. If necessary to effectuate the intent of the Parties, the Parties will negotiate in good faith to amend this Agreement to replace the unenforceable language with enforceable language that reflects such intent as closely as possible.

L. Counterparts.

This Agreement may be executed in two or more counterparts, each of which will be an original, with the same effect as if the signatures thereto and hereto were upon the same instrument, and shall

become effective when one or more counterparts have been signed by each of the Parties and delivered (by facsimile or otherwise) to the other Party.

IN WITNESS WHEREOF, the District and the County have executed this Agreement as of the date first above written.

COUNTY OF SONOMA:

By: _____

Johannes J. Hoevertsz
Director of Transportation and Public Works
County of Sonoma

APPROVED AS TO FORM FOR COUNTY:

By: _____
Jeremy Fonseca, Deputy County Counsel

SONOMA-MARIN AREA RAIL TRANSIT DISTRICT:

By: _____

Farhad Mansourian
General Manager
SMART

APPROVED AS TO FORM FOR DISTRICT:

By: _____
Thomas Lyons, SMART Counsel

EXHIBIT A

SCOPE OF WORK

A. The scope of work includes the widening of Airport Boulevard from Aviation Boulevard to Regional Parkway: demolition of conflicting existing infrastructure, paving activities, installation of new concrete curb, gutter, driveways, and sidewalk, installation of new street lights and associated conduits, relocation of bus stop, and installation of a new traffic signal including the interconnect into the railroad system.

Also included, 50% Plans

EXHIBIT A

CIVIL/TRACK/STRUCTURES DRAWINGS FOR DESIGN BUILD CONTRACT

CV-DB-18-001
WINDSOR EXTENSION

DESIGN PACKAGE 2: MILEPOST 59.9 TO MILEPOST 60
SONOMA COUNTY WORK (AIRPORT BLVD WIDENING)

SONOMA COUNTY, CALIFORNIA
MARCH 18, 2020

DESIGN PACKAGE SUMMARY		
PKG	LIMITS	NOTES
DP–1	MP59.9 TO MP63.4	EARLY WORK (BRIDGES, TRACK/ GUIDEWAY, CROSSINGS)
DP–2	MP59.9	SONOMA COUNTY WORK (AIRPORT BLVD WIDENING)
DP–3	MP59.9 TO MP63.4	REMAINING WORK (WINDSOR STATION, NMP, & PARKINGLOT)

PREPARED BY

STV 100 Years

STV INCORPORATED
560 14TH STREET, SUITE 400
OAKLAND, CA 94612
T 510.763.1313
www.stvinc.com

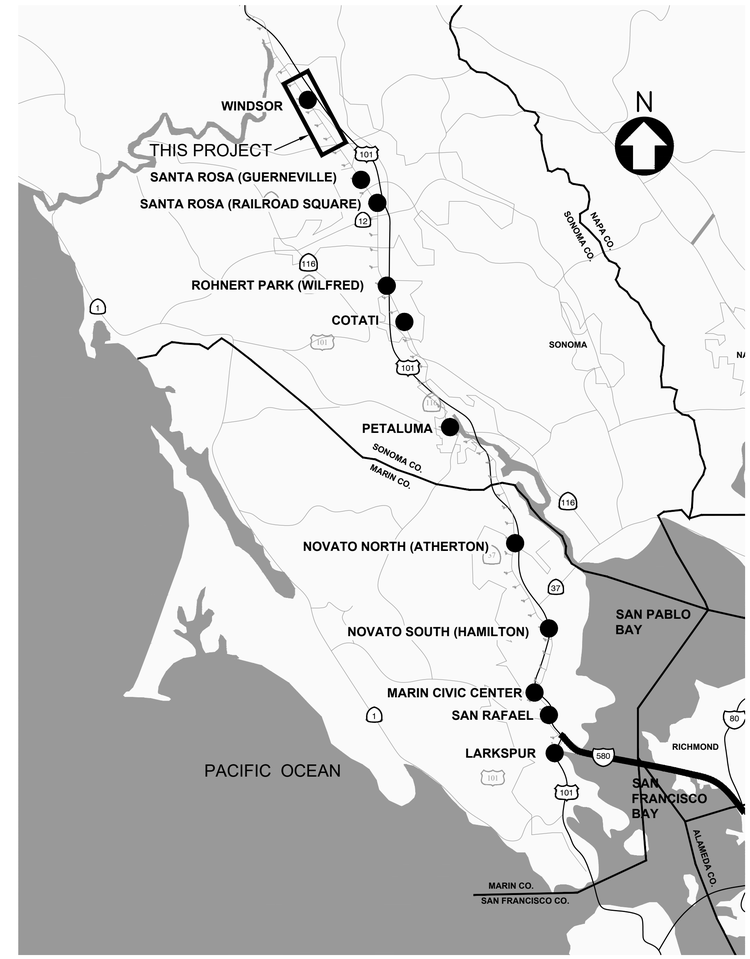

LOCATION MAP
NOT TO SCALE

REV	DATE	BY	SUB	APR	DESCRIPTION

Stacy and Witbeck, Inc.
STV 100 Years

NOT FOR CONSTRUCTION

PREPARED BY M. MAMAWAL
DRAWN BY Z. OHN
CHECKED BY S. MAGALLON
IN CHARGE A. SOKOL
DATE MAR 18, 2020

DESIGN PACKAGE 2
50% SUBMITTAL

MARCH 18, 2020

SONOMA-MARIN SMART AREA RAIL TRANSIT

WINDSOR EXTENSION
GENERAL
COVER SHEET

SHEET 1 OF 44

CADD FILENAME G001.dwg
SCALE NONE
CONTRACT NO. CV–DB–18–001
DWG. NO. G001
MILEPOST

EXHIBIT A

SHEET	DWG NO.	REV NO.	DWG NAME DESCRIPTION
			GENERAL
1	G001		COVER SHEET
2	G002		INDEX OF DRAWINGS
3	GN001		LEGEND AND SYMBOLS
4	KM001		KEY MAP
5	GN002		ABBREVIATIONS
6	GN003		ABBREVIATIONS AND GENERAL NOTES
7	GN004		SURVEY CONTROL DIAGRAM
8	GN005		SURVEY CONTROL DIAGRAM
			TYPICAL SECTIONS
9	GX005		TYPICAL SECTION AT AIRPORT BOULEVARD
10	GX101		AIRPORT BLVD PLAN AND PROFILE CPUC NO. XXXXXX
11	GX102		AIRPORT BLVD SIGNAGE AND STRIPING PLAN CPUC NO. XXXXXX
12	GX103		AIRPORT BLVD DRAINAGE AND UTILITY PLAN CPUC NO. XXXXXX
			TRAFFIC
32	TF102		AIRPORT BLVD SIGNING AND STRIPING PLAN 2 OF 3
33	TF103		AIRPORT BLVD SIGNING AND STRIPING PLAN 3 OF 3
34	TF104		AIRPORT BLVD SIGNING AND STRIPING PLAN 4 OF 3
			TRAFFIC SIGNAL
13	TS101		TRAFFIC SIGNALS INSTALLATION PLAN AIRPORT BOULEVARD GRADE CROSSING
14	TS103		TRAFFIC SIGNALS LOOP PLAN AIRPORT BOULEVARD AT AVIATION BOULEVARD
15	TS104		TRAFFIC SIGNALS AIRPORT BOULEVARD CONDUIT RUN
			ROAD IMPROVEMENTS
16	RD001		AIRPORT BLVD ROADWAY TYPICAL SECTIONS AND DETAILS
17	RD002		AIRPORT BLVD CONSTRUCTION DETAIL SHEET SHEET 1 OF 2
18	RD003		AIRPORT BLVD CONSTRUCTION DETAIL SHEET SHEET 2 OF 2
19	RD101		AIRPORT BLVD ROADWAY DEMOLITION PLAN 1 OF 3
20	RD102		AIRPORT BLVD ROADWAY DEMOLITION PLAN 2 OF 3
21	RD103		AIRPORT BLVD ROADWAY DEMOLITION PLAN 3 OF 3
22	RD201		AIRPORT BLVD ROADWAY PLAN AND PROFILE 1 OF 3
23	RD202		AIRPORT BLVD ROADWAY PLAN AND PROFILE 2 OF 3
24	RD203		AIRPORT BLVD ROADWAY PLAN AND PROFILE 3 OF 3
25	RD301		AIRPORT BLVD GRADING CROSS SECTIONS 1 OF 3
26	RD302		AIRPORT BLVD GRADING CROSS SECTIONS 2 OF 3
27	RD303		AIRPORT BLVD GRADING CROSS SECTIONS 3 OF 3
			DRAINAGE
28	SD101		AIRPORT BLVD STORM DRAIN PLAN AND PROFILE 1 OF 3
29	SD102		AIRPORT BLVD STORM DRAIN PLAN AND PROFILE 2 OF 3
30	SD103		AIRPORT BLVD STORM DRAIN PLAN AND PROFILE 3 OF 3
31	SD501		AIRPORT BLVD STORM DRAIN DETAIL SHEET (1 OF 2) SHEET 1 OF 2
			SIGNING AND STRIPING
32	TF102		AIRPORT BLVD SIGNING AND STRIPING PLAN 2 OF 3
33	TF103		AIRPORT BLVD SIGNING AND STRIPING PLAN 3 OF 3
34	TF104		AIRPORT BLVD SIGNING AND STRIPING PLAN 4 OF 3
			GRADING CROSS SECTIONS
35	XS101		AIRPORT BLVD GRADING CROSS SECTIONS
36	XS102		AIRPORT BLVD GRADING CROSS SECTIONS
37	XS103		AIRPORT BLVD GRADING CROSS SECTIONS
38	XS104		AIRPORT BLVD GRADING CROSS SECTIONS
39	XS105		AIRPORT BLVD GRADING CROSS SECTIONS
			ELECTRICAL
40	E130		AIRPORT BLVD LIGHTING SCOPE LIMITS AND SITE KEY PLAN
41	E131		AIRPORT BLVD LIGHTING LAYOUT AND CONDUIT
42	E135		AIRPORT BLVD PROPOSED LIGHTING PHOTOMETRICS
43	E136		AIRPORT BLVD EXISTING LIGHTING PHOTOMETRICS
44	ED06		AIRPORT BLVD ROADWAY LIGHTING SONOMA COUNTY CONSTRUCTION STANDARDS

EXHIBIT A

LEGEND & SYMBOLS – PROPOSED IMPROVEMENTS

- EXISTING ROW
- PROPOSED ROW
- PROPOSED RETAINING WALL
- PROPOSED SHEET PILE RETAINING WALL
- PROPOSED & EXISTING CULVERT
- SD — PROPOSED STORM DRAIN
- PROPOSED STORM DRAIN
- UD — PROPOSED UNDERDRAIN
- PROPOSED SANITARY SEWER FORCE MAIN
- PROPOSED TOP OF RAIL
- PROPOSED MAINLINE TRACK/SIDING
- PROPOSED SD INLET WITH GRATE
- PROPOSED SD INLET WITH SIDE OPENINGS
- PROPOSED CATCH BASIN
- PROPOSED STATION PLATFORM
- HWY 101 — EXISTING OVERPASS
- PROPOSED TURNOUT
- PS — PROPOSED POINT OF SWITCH (DISPLAYED IN PROFILE)
- RAILROAD DRAINAGE DITCH, ROADWAY DRAINAGE AND DIRECTION OF FLOW
- PROPOSED FENCE
- CATCH — CATCH — DAYLIGHT LINE
- PROPOSED LOW IMPACT DEVELOPMENT (LID)/BIORETENTION AREA
- PROPOSED HMA PAVING
- PROPOSED CONCRETE
- PROPOSED NON–TRAVERSABLE SURFACE
- XX — MILEPOST
- 101 — HIGHWAY
- PROPOSED POINT OF SWITCH
- PROPOSED DIRECTIONAL INDICATORS OF TRAFFIC FLOW
- PROPOSED PEDESTRIAN ARM GATE
- PROPOSED VEHICULAR ARM GATE
- PROPOSED CANTILEVER
- PROPOSED WARNING SIGNAL
- CIL XX.XX — PROPOSED CENTRAL INSTRUMENT LOCATION (FOUNDATION PAD ONLY)
- 1S — PROPOSED WAYSIDE SIGNAL (FOUNDATION PAD ONLY)
- M — PROPOSED METER
- H — PROPOSED HAND HOLE
- CAB — PROPOSED PG&E SERVICE CABINET
- PGE — PROPOSED PG&E VAULT
- PROPOSED CLEANOUT
- PROPOSED SD MANHOLE
- TS — PROPOSED TRAFFIC SIGNAL PULL BOX
- PROPOSED LUMINAIRE
- SECURITY CAMERA LOCATION
- PROPOSED TRAFFIC SIGNAL WITH STREET LIGHT AND PEDESTRIAN SIGNAL
- SURVEYED POTHOLE LOCATION
- EL 104.00 — WATER SURFACE ELEVATION

TOPO SYMBOLS – EXISTING FEATURES

- ATT — AT&T UTILITY LINE
- CHAIN LINK FENCE
- 8"GAS / G — GAS LINE
- HO — OVERHEAD ELECTRIC LINE
- OVERHEAD ELECTRIC (HIGH VOLTAGE)
- OVE HIGH VOLTAGE — OVERHEAD UTILITY LINES (HIGH VOLTAGE)
- 8"RW — RECLAIMED WATER LINE
- 6"SS — SANITARY SEWER LINE
- SS — SANITARY SEWER LINE – PRIVATE
- SSFM — SANITARY SEWER FORCE MAIN
- 72"SD — STORM DRAIN LINE
- CBL — UNDERGROUND CABLE/TV UTILITY LINES
- ELEC — UNDERGROUND ELECTRICAL
- FO — UNDERGROUND FIBER OPTIC CABLE
- TEL — UNDERGROUND TELEPHONE LINE
- TS — UNDERGROUND TRAFFIC UTILITY LINES
- 14"W — WATER LINE
- CONCRETE
- PERIMETER OF BUILDING
- DRAINAGE INLET
- DS — DRAINAGE DOWNSPOUT
- FIRE HYDRANT
- HOSE BIB
- IRRIGATION CONTROL VALVE
- W — MONITORING WELL
- RECLAIMED WATER VALVE
- CO — SANITARY SEWER CLEANOUT
- S — SANITARY SEWER MANHOLE
- STORM DRAIN CATCH BASIN
- D — STORM DRAIN MANHOLE
- SD — STORM DRAIN PIPE
- SP — WATER VALVE
- W — WATER METER
- C — CABLE TV BOX
- E TS — ELECTRIC BOX
- E — ELECTRIC LID
- ETS — GAS VALVE
- G G — GAS METER
- JP — JOINT UTILITY POLE
- LANDSCAPE LIGHT
- PP — POWER POLE
- PGE — PG&E VAULT
- RP — RISER POLE
- SP — SERVICE POLE
- STREET LIGHT
- LB — STREET LIGHT BOX
- TELEPHONE BOX
- T — TELEPHONE MANHOLE
- T — TELEPHONE POLE
- TRAFFIC DETECTOR LID
- TRAFFIC SIGNAL
- SL — TRAFFIC SIGNAL LIGHT BOX
- S — TRAFFIC SIGNAL POLE W/STREET LIGHT
- UTILITY MANHOLE
- BOLLARD
- M — MAILBOX
- SIGN
- SIGNAL GATE
- TREE SYMBOL AND DRIP LINE
- RAILROAD SWITCH
- FOUND IRON PIPE, SIZE AND TAGGED AS NOTED
- FOUND MONUMENT, SIZED AND STAMPED, AS NOTED
- + 100.00 — SPOT ELEVATION
- SURVEY CONTROL POINT
- EXISTING EASEMENT
- EXISTING GROUND
- EXISTING PROPERTY PARCEL
- EXISTING TOP OF RAIL
- EXISTING TRACK
- 25 — MAJOR CONTOURS
- MINOR CONTOURS

N — NORTH ARROW

40' 0' 40' 80' SCALE — SCALE BAR SAMPLE

MATCH LINE ML 2747+00 SEE DWG NO. 1T366
MP 53.7 — MATCH LINE SAMPLE

REV	DATE	BY	SUB	APR	DESCRIPTION

Stacy and Witbeck, Inc.
STV 100 Years

NOT FOR CONSTRUCTION

PREPARED BY M. MAMAWAL
DRAWN BY Z. OHN
CHECKED BY S. MAGALLON
IN CHARGE A. SOKOL
DATE MAR 18, 2020

DESIGN PACKAGE 2
50% SUBMITTAL

MARCH 18, 2020

SONOMA-MARIN SMART AREA RAIL TRANSIT

WINDSOR EXTENSION
GENERAL
LEGEND AND SYMBOLS

SHEET 3 OF 44

CADD FILENAME GN001.dwg
SCALE NONE
CONTRACT NO. CV–DB–18–001
DWG. NO. GN001
MILEPOST N/A

EXHIBIT A

REV	DATE	BY	SUB	APR	DESCRIPTION

Stacy and Witbeck, Inc.
STV 100 Years

NOT FOR CONSTRUCTION

PREPARED BY M. MAMAWAL
DRAWN BY Z. OHN
CHECKED BY S. MAGALLON
IN CHARGE A. SOKOL
DATE MAR 18, 2020

DESIGN PACKAGE 2
50% SUBMITTAL

MARCH 18, 2020

SONOMA-MARIN SMART AREA RAIL TRANSIT

WINDSOR EXTENSION
GENERAL DP2
PLAN & PROFILE

SHEET 4 OF 44

CADD FILENAME KM001.dwg
SCALE 1"=500'
CONTRACT NO. CV-DB-18-001
DWG. NO. KM001
MILEPOST

dadeathn Mar 11, 2020 6:24pm i:\Projects\4020430\4020430_0001\90_CAD Models and Sheets\05 Construction Packages\14 Windsor Extension\003 DWG\04 SHEETS\01 General\KM001.dwg

EXHIBIT A

ABBREVIATIONS

&	AND
Oc	DEGREE OF CURVE
AAR	ASSOCIATION OF AMERICAN RAILROADS
AB	AGGREGATE BASE
ABAN	ABANDON
ABUT	ABUTMENT
AC	ASPHALT CONCRETE
ALG	ALIGNMENT
ALT	ALTERNATE
ALUM	ALUMINUM
AP	ANGLE POINT
APPROX	APPROXIMATE
APVD	APPROVED
AREMA	AMERICAN RAILWAY ENGINEERING AND MAINTENANCE OF WAY ASSOCIATION
ASSY	ASSEMBLY
ASTM	AMERICAN SOCIETY FOR TESTING AND MATERIALS
AUTO	AUTOMATIC
AUX	AUXILIARY
AVE	AVENUE
AVG	AVERAGE
BB	BEGINNING OF BRIDGE
BBD	BEAM BALLAST DECK
BDT	BALLAST DECK TRESTLE
BITUM	BITUMINOUS
BK	BACK
BM	BENCH MARK
BNSF	BURLINGTON NORTHERN SANTA FE
BOC	BACK OF CURB
BOW	BOTTOM OF WALL
BR	BRIDGE
BRG	BEARING
BTW	BETWEEN
BLVD	BOULEVARD
BW	BACK OF SIDEWALK
BYP	BYPASS
C	CONDUIT
C&G	CURB AND GUTTER
CALTRANS	CALIFORNIA DEPARTMENT OF TRANSPORTATION
CANT.	CANTILEVER
CAP	CAPACITY
CB	CATCH BASIN
CC	CATTLE CROSSING
CE	CONCRETE EDGE
CF	CUBIC FEET (FOOT)
CIL	CENTRAL INSTRUMENT LOCATION
CIP	CAST IN PLACE
℄	CENTERLINE
CL4	4 FT HIGH CHAIN LINK FENCE
CL6	6 FT HIGH CHAIN LINK FENCE
CLR	CLEAR OR CLEARANCE
CMP	CORRUGATED METAL PIPE
CO.	COUNTY
CO	CLEAN OUT
COMP	COMPROMISE
CONC	CONCRETE
CONST	CONSTRUCTION
CONT	CONTINUOUS
COOR	COORDINATE
CP	CONCRETE PIPE
CPUC	CALIFORNIA PUBLIC UTILITIES COMMISSION

CS	POINT OF CHANGE FROM CIRCULAR CURVE TO SPIRAL CURVE
CSP	CANTILEVER SOLDIER PILE
CULV	CULVERT
Cv	NAME OF CURVE
CY	CUBIC YARDS
DBL	DOUBLE
DEG	DEGREE
DEMO	DEMOLITION
DET	DETAIL
DH	DRILLED HOLE
DI	DROP INLET
DIA	DIAMETER
DIFF	DIFFERENTIAL, DIFFERENCE
DIM	DIMENSION
DIP	DUCTILE IRON PIPE
DIST	DISTANCE
DN	DOWN
DOT	U.S. DEPARTMENT OF TRANSPORTATION
DP	DEPTH
DR	DRIVE
D.S.	DESIGN SPEED
DS	DRAINAGE STRUCTURE
DTR	DETOUR
DUP	DUPLICATE
DWG	DRAWING
DWS	DETECTABLE WARNING SURFACE
E	EAST OR SUPERELEVATION IN INCHES
EA	EACH
EB	EASTBOUND, END OF BRIDGE
EG	EXISTING GROUND
EL, ELEV	ELEVATION
EP	EDGE OF PAVEMENT
EQPT	EQUIPMENT
EX	EXISTING
EXIST	EXISTING
EOR	ENGINEER OF RECORD
EW	EACH WAY
FES	FLARED END SECTION
FG	FINISHED GRADE
FH	FIRE HYDRANT
FL	FLOW LINE (LEVEL)
F.L.	FLASHING LIGHT (SIGNAL)
FOC	FACE OF CURB
FT	FOOT OR FEET
FV	FIELD VERIFY
FWY	FREEWAY
FW	FIRE WATER
GA	GROUND ANCHOR
GALV	GALVANIZED
GC	GRADE CROSSING
GD	GRADE
GND	GROUND
G.O.	GENERAL ORDER
GSP	GALVANIZED STEEL PIPE
H	HEIGHT OR HORIZONTAL
HDPE	HIGH DENSITY POLYETHYLENE
HGL	HYDRAULIC GRADE LINE

HI	HIGH
HMA	HOT MIX ASPHALT
HP	HIGH POINT
HRZ	HORIZONTAL
HW	HEADWALL, HI WATER ELEVATION
HWY	HIGHWAY
ID	INSIDE DIAMETER
IE	INVERT ELEVATION
IJ	INSULATED JOINT
IN	INCH OR INCHES
INCL	INCLUDING
INFO	INFORMATION
INV	INVERT
IR	INSIDE RADIUS
JT	JOINT
JP	JOINT POLE
K	RATE OF CHANGE
L	LENGTH
LB	POUND
LE	LARKSPUR EXTENSION
LED	LIGHT EMITTING DIODE
LF	LINEAR FOOT
LG	LONG
LH	LEFT HAND
LP	LOW POINT
LOL	LAY OUT LINE
Ls	LENGTH OF SPIRAL
LS	LUMP SUM
LT	LEFT
MAR	MAINTENANCE ACCESS ROADWAY
MAX	MAXIMUM
MH	MANHOLE
MIN	MINIMUM
MISC	MISCELLANEOUS
ML	MAINLINE
MMWD	MARIN MUNICIPAL WATER DISTRICT
MOD	MODIFY OR MODIFIED
MON	MONUMENT
MP	MILE POST
MPH	MILES PER HOUR
MUP	MULTIUSE PATH
MUTCD	MANUAL ON UNIFORM TRAFFIC CONTROL DEVICES
N	NORTH
NB	NORTHBOUND
NCRA	NORTH COAST RAIL AUTHORITY
NIC	NOT IN CONTRACT
NMP	NON–MOTORIZED PATHWAY
No	NUMBER
NTS	NOT TO SCALE
NWP	NORTHWESTERN PACIFIC RAILROAD
O/S	OFFSET
OC	ON CENTER
OD	OUTSIDE DIAMETER
ODT	OPEN DECK TRUSS
OFF	OFFSET
OHW	ORDINARY HIGH WATER MARK

OTM	OTHER TRACK MATERIAL
PC	POINT OF CURVE
PCC	POINT OF COMPOUND CURVE OR PORTLAND CEMENT CONCRETE
PED	PEDESTRIAN
PG&E	PACIFIC GAS AND ELECTRIC COMPANY
PGL	PROFILE GRADE LINE
PITO	POINT OF INTERSECTION OF TURNOUT
POC	POINT OF (ON) CURVE
POT	POINT OF (ON) TANGENT
PP	POWER POLE
PR	PAIR
PRC	POINT OF REVERSE CURVE
PROP	PROPERTY OR PROPOSED
P.S.	POSTED SPEED
PS	POINT OF SWITCH
PSPC	PRESTRESSED PRECAST
PT	POINT OF TANGENT
PVC	POLYVINYL CHLORIDE OR POINT OF VERTICAL CURVE
PVI	POINT OF VERTICAL INTERSECTION
PVMT	PAVEMENT
PVRCE	POINT OF VERTICAL REVERSE CURVE ELEVATION
PVRCS	POINT OF VERTICAL REVERSE CURVE STATION
PVT	POINT OF VERTICAL TANGENT
PWR	POWER
QTY	QUANTITY
R	RADIUS
Rc	RADIUS OF CURVE
RCB	REINFORCED CONCRETE BOX
RCP	REINFORCED CONCRETE PIPE
RD	ROAD
RH	RIGHT HAND
ROW	RIGHT–OF–WAY
RR	RAILROAD
RT	RIGHT
RW	RETAINING WALL
S	SOUTH
SB	SOUTHBOUND
SC	POINT OF CHANGE FROM SPIRAL TO CIRCULAR CURVE
SCH	SCHEDULE
SD	STORM DRAIN
SF	SQUARE FEET
SMART	SONOMA MARIN AREA RAIL TRANSIT DISTRICT
SP	SOLDIER PILE OR SHEET PILE
SPGA	SOLDIER PILE WITH GROUND ANCHOR
SPW	SHEET PILE WALL
SS	SANITARY SEWER
SSM	SUPPLEMENTAL SAFETY MEASURES
SSMH	SANITARY SEWER MANHOLE
ST	POINT OF CHANGE FROM SPIRAL TO TANGENT OR STREET
STA	STATION
STD	STANDARD
STL	STEEL
SVC	SERVICE
SW	SIDEWALK
SYS	SYSTEM
T	TANGENT
TBD	TO BE DETERMINED

REV	DATE	BY	SUB	APR	DESCRIPTION

Stacy and Witbeck, Inc.
STV 100 Years

NOT FOR CONSTRUCTION

PREPARED BY M. MAMAWAL
DRAWN BY Z. OHN
CHECKED BY S. MAGALLON
IN CHARGE A. SOKOL
DATE MAR 18, 2020

DESIGN PACKAGE 2
50% SUBMITTAL

MARCH 18, 2020

SONOMA-MARIN SMART AREA RAIL TRANSIT

WINDSOR EXTENSION

GENERAL
ABBREVIATIONS

SHEET 5 OF 44

CADD FILENAME GN002–GN003.dwg
SCALE NONE
CONTRACT NO. CV–DB–18–001
DWG. NO. GN002
MILEPOST N/A

dadsethn Mar 11, 2020 – 6:24pm I:\Projects\4020430\4020430_0001\90_CAD Models and Sheets\05 Construction Packages\14 Windsor Extension\003 PWX\04 SHEETS\01 General\GN002–GN003.dwg

ABBREVIATIONS

EXHIBIT A

TF	TRACK FOOT OR TRACK FEET
TM	TRACK MILE
TO	TURNOUT
TOC	TOP OF CONCRETE
TOR	TOP OF RAIL
TOW	TOP OF WALL
TS	POINT OF CHANGE FROM TANGENT TO SPIRAL
TYP	TYPICAL
U	UNBALANCED SUPERELEVATION IN INCHES
UCG	UNDERCROSSING
UCS	UNIFORM CONSTRUCTION STANDARDS
UCSMC	UNIFORM CONSTRUCTION STANDARDS MARIN COUNTY
UD	UNDERDRAIN
UG	UNDERGROUND
UPRR	UNION PACIFIC RAILROAD
UNK	UNKNOWN
UON	UNLESS OTHERWISE NOTED
V	VERTICAL OR VELOCITY
V/L	AVERAGE CHANGE OF GRADE IN GRADIENT PER 100' STATION
VC	VERTICAL CURVE
VPC	VERTICAL POINT OF CURVATURE
VPI	VERTICAL POINT OF INTERSECTION
VPT	VERTICAL POINT OF TANGENCY
W	WEST OR WATER
W/	WITH
W/O	WITHOUT
WB	WESTBOUND
WBC	WOOD BOX CULVERT
WWF	WELDED WIRE FABRIC
XING	RAILROAD CROSSING

EXHIBIT A

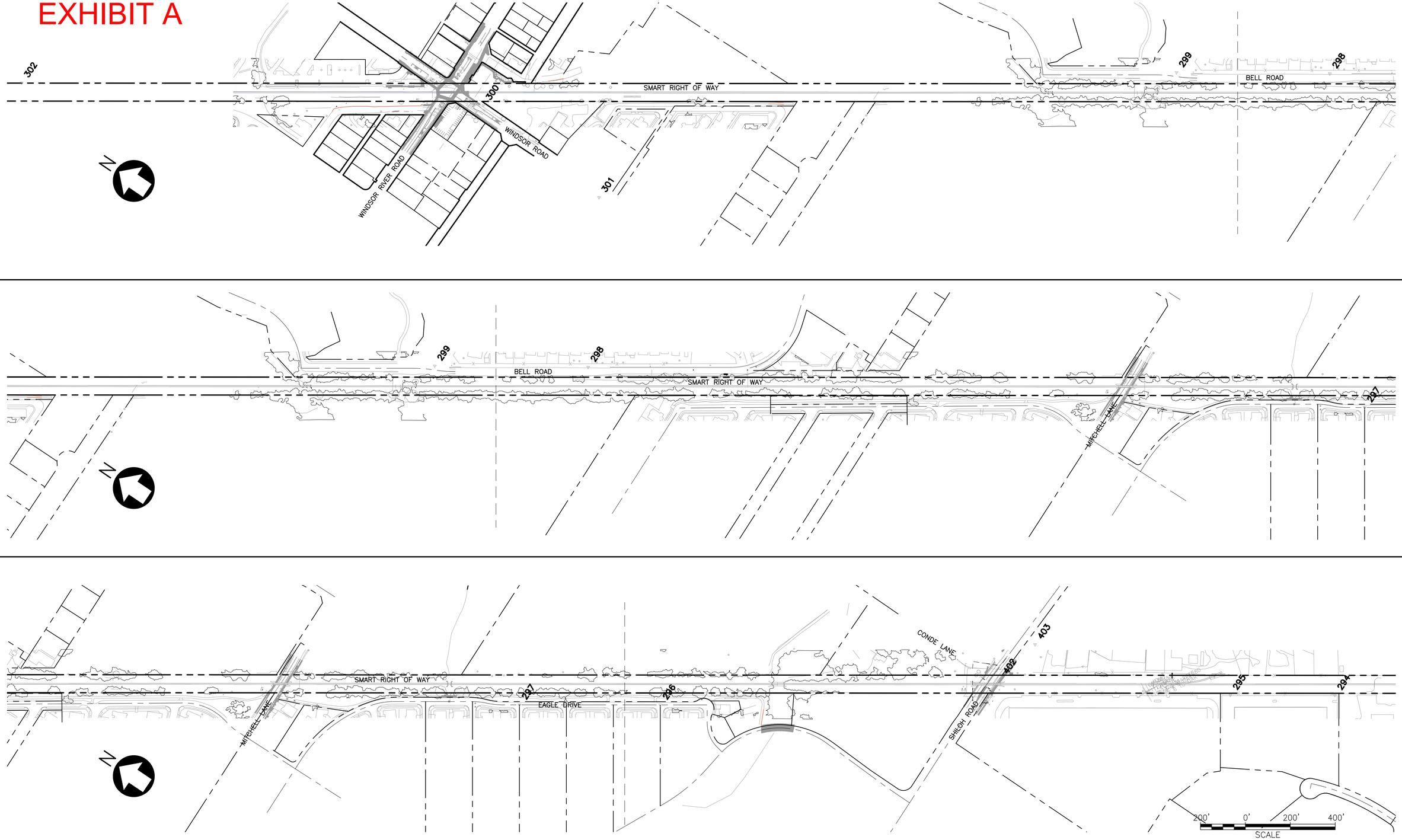

REV	DATE	BY	SUB	APR	DESCRIPTION

Stacy and Witbeck, Inc.
STV 100 Years

NOT FOR CONSTRUCTION

PREPARED BY C. SCHMITT
DRAWN BY C. SCHMITT
CHECKED BY J. DICKEY
IN CHARGE B. BERGER
DATE MAR 18, 2020

DESIGN PACKAGE 2
50% SUBMITTAL

MARCH 18, 2020

SONOMA-MARIN SMART AREA RAIL TRANSIT

WINDSOR EXTENSION

GENERAL
SURVEY CONTROL DIAGRAM

SHEET 7 OF 44

CADD FILENAME GN004.dwg
SCALE 1"= 200'
CONTRACT NO. CV-DB-18-001
DWG. NO. GN004
MILEPOST 63.0

dadpathis Mar 11, 2020 - 6:25pm I:\Projects\4020430\4020430_0001\90_CAD Models and Sheets\05 Construction Packages\14 Windsor Extension\003 DWG\04 SHEETS\01 General\GN004.dwg

EXHIBIT A

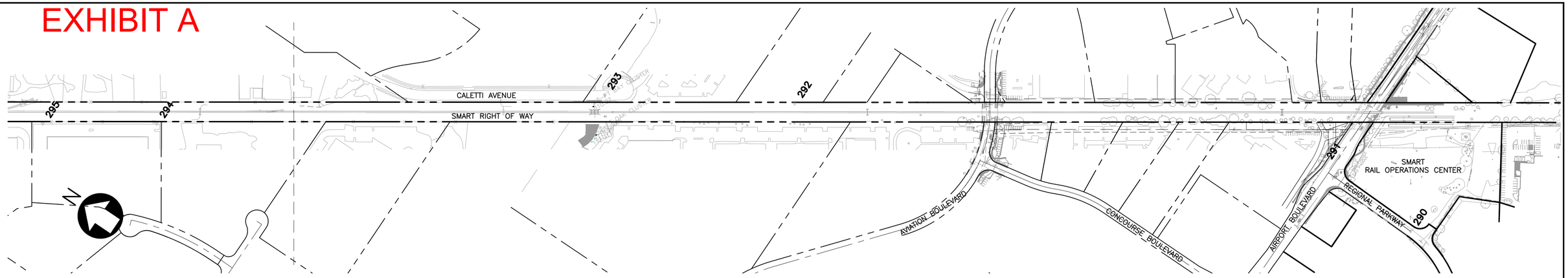

POINT TABLE				
POINT NO.	NORTHING	EASTING	ELEVATION	DESCRIPTION
290	1948525.172	6336665.944	123.84	Set 2" Alum. Cap
291	1948968.671	6336692.919	124.27	Set 2" Alum. Cap
292	1950897.637	6335694.351	114.41	Set 2" Alum. Cap
293	1951558.088	6335289.344	115.27	Found 2" Brass Cap in Monument Well
294	1953006.742	6334172.376	112.42	Set 2" Alum. Cap
295	1953392.583	6333912.653	112.08	Set 2" Alum. Cap
296	1955473.170	6332457.029	104.03	Found 2" Brass Cap in Monument Well
297	1955993.106	6332106.614	100.96	Found 2" Brass Cap in Monument Well
298	1958960.214	6330322.327	103.23	Set 2" Alum. Cap
299	1959529.196	6329944.803	104.67	Set 2" Alum. Cap
300	1962005.637	6328097.628	117.21	Set 2" Alum. Cap
301	1961349.458	6328045.672	114.32	Set 2" Alum. Cap
302	1963766.864	6327031.265	120.58	Set 2" Alum. Cap
402	1954280.104	6333399.760	110.40	Set Cut "X" in Concrete
403	1954239.847	6333613.316	108.80	Set Cut "X" in Concrete

NOTES:
HORIZONTAL DATUM: THE HORIZONTAL DATUM IS CALIFORNIA COORDINATE SYSTEM OF 1983, ZONE 2, EPOCH 2017.50. ALL DISTANCES ON THESE DRAWINGS ARE BASED ON GRID MEASUREMENTS, TO OBTAIN GROUND DISTANCES MULTIPLE BY THE APPROPRIATE SCALE FACTOR. THIS COORDINATE SYSTEM IS UTILIZED FOR THE ENTIRE SMART CORRIDOR. POINTS ON THIS SYSTEM ARE LISTED IN THE POINT TABLE TO THE LEFT.

VERTICAL DATUM: THE VERTICAL DATUM IS USED FOR THE SMART CORRIDOR WHICH IS BASED ON TIES TO NAVD 88 BENCHMARKS. AND IS SHOWN UNDER THE "POINT TABLE" TO THE LEFT.

dadpathis Mar 11, 2020 – 6:25pm I:\Projects\4020430\4020430_00011\90_CAD Models and Sheets\05 Construction Packages\14 Windsor Extension\003 DWG\04 SHEETS\01 General\GN004.dwg

REV	DATE	BY	SUB	APR	DESCRIPTION

Stacy and Witbeck, Inc.
STV 100 Years

NOT FOR CONSTRUCTION

PREPARED BY C. SCHMITT
DRAWN BY C. SCHMITT
CHECKED BY J. DICKEY
IN CHARGE B. BERGER
DATE MAR 18, 2020

DESIGN PACKAGE 2
50% SUBMITTAL

MARCH 18, 2020

SONOMA-MARIN SMART AREA RAIL TRANSIT

WINDSOR EXTENSION

GENERAL
SURVEY CONTROL DIAGRAM

SHEET 8 OF 44

CADD FILENAME GN004.dwg
SCALE 1"= 200'
CONTRACT NO. CV-DB-18-001
DWG. NO. GN004
MILEPOST 59.9

EXHIBIT A

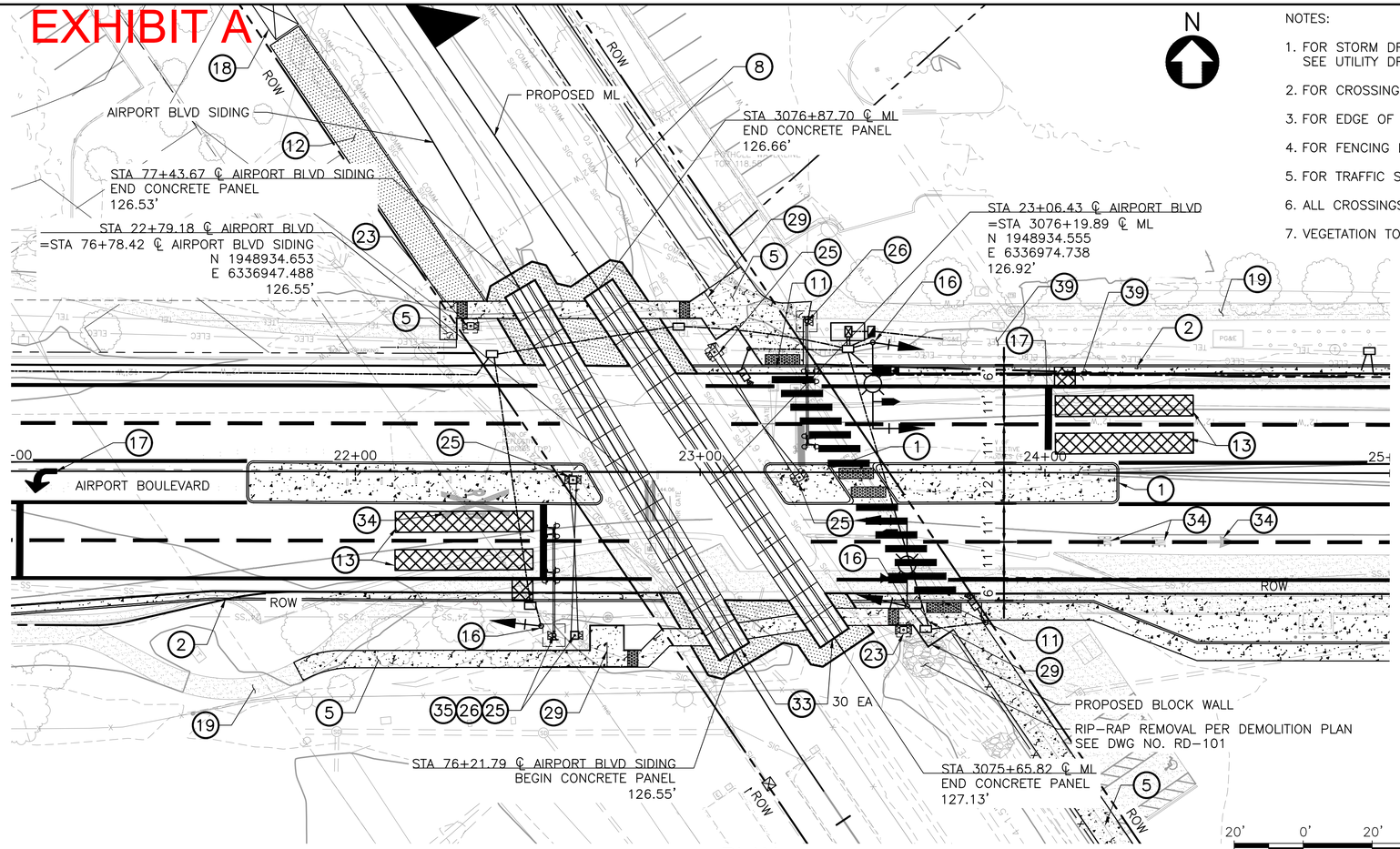

PLAN

SCALE: 1"=20'

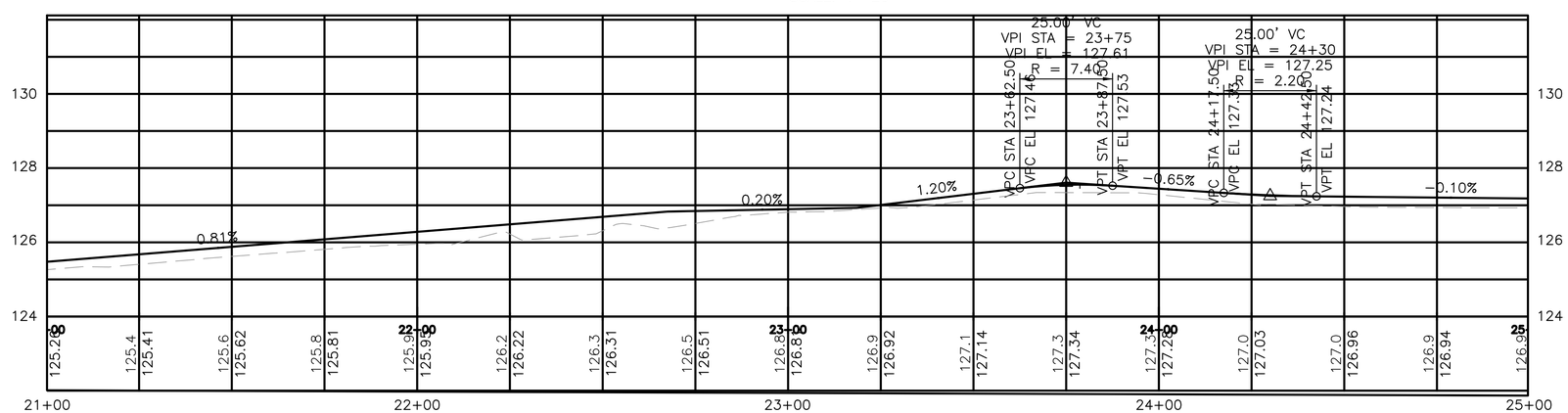

PROFILE

SCALE: 1"=20' HORIZ, 1"=5' VERT

NOTES:

1. FOR STORM DRAIN AND OTHER UTILITY INFORMATION, SEE UTILITY DRAWINGS.
2. FOR CROSSING SECTION, REFER TO DETAIL 5 ON GX002.
3. FOR EDGE OF PANEL ELEVATIONS, SEE GX104.
4. FOR FENCING DETAILS, REFER TO UTILITY AND FENCING PLAN.
5. FOR TRAFFIC SIGNAL DETAILS, REFER TO TRAFFIC SIGNAL PLAN.
6. ALL CROSSINGS TO BE QUIET ZONE READY.
7. VEGETATION TO BE CLEARED IN ALL QUADRANTS.

CONSTRUCTION NOTES:

1. CONCRETE MEDIAN
2. CURB & GUTTER PER SONOMA COUNTY DWG NO. 220.
3. CURB, GUTTER & SIDEWALK PER SONOMA COUNTY DWG NO. 220.
4. REPLACE CURB AND GUTTER IN KIND.
5. SIDEWALK PER SONOMA COUNTY DWG NO. 220.
6. PEDESTRIAN CURB CUT RAMP PER SONOMA COUNTY DWG NO. 224A.
7. REINFORCED CONCRETE PIPE PER CALTRANS STD A79
8. NON-MOTORIZED PATHWAY.
9. AC PAVEMENT
10. REMOVE SURFACE EVIDENCE OF EXISTING CROSSWALK MARKINGS AND PAVER SURFACE. MUST HAVE SERVICE LIFE OF AT LEAST 10 YEARS.
11. MOUNTABLE CURB AND REINFORCED SIDEWALK (MIN. 6" THICK PCC WITH #4 REBAR AT 12" EA WAY) AT CIL ACCESS ROAD
12. CIL ACCESS ROAD MINIMUM 6" THICK CLASS II AB, MAX 10% GRADE
13. TRAFFIC DETECTOR ZONES.
14. PROTECT EXISTING CURB AND GUTTER
15. PROTECT EXISTING DRIVEWAY
16. TRAFFIC SIGNAL
17. TRAFFIC MARKINGS AND STRIPING
18. CENTRAL INSTRUMENT HOUSING LOCATION (CIL)
19. PROTECT EXISTING SIDEWALK
21. 2" CONDUIT WITH PULLROPE FOR FUTURE SIGNAL INTERCONNECT. TERMINATE ADJACENT TO SIGNAL CONTROLLER. PULL BOXES INSTALLED AT <200 FEET OF CONDUIT
22. PEDESTRIAN WARNING DEVICE AND AUTOMATIC GATE ARM W/ FLASHER
23. FLASHING LIGHT SIGNAL ASSEMBLY.
24. REPLACE PAVEMENT MARKING IN KIND
25. FLASHING LIGHT SIGNAL ASSEMBLY WITH AUTOMATIC GATE ARM
26. FLASHING LIGHT SIGNAL ASSEMBLY OVER THE ROADWAY ON A CANTILEVERED ARM
27. PEDESTRIAN SWING GATE
28. 4' HIGH CHAIN LINK FENCE
29. CHANNELIZATION RAILING
30. 4' HIGH VINYL COATED CHAIN LINK FENCE
31. 6' HIGH CHAIN LINK FENCE
32. NOT USED
33. PRECAST CONCRETE PANEL CROSSING SYSTEM
34. REMOVE PAVEMENT MARKING BY GRINDING
35. POTENTIAL CONFLICTS TREE OR UTILITY
36. QWICK KURB
37. PEDESTRIAN BARRICADE (TYPE 1) PER CALTRANS STD ES7Q WITH BOLTED POSTS PER GX004
38. NEW COMMERCIAL DRIVEWAY PER TOW STD. PLAN 206.
39. REMOVE TREE. MINIMUM REQUIRED TREE REMOVAL SHOWN. CONTRACTOR MAY BE REQUIRED TO REMOVE OR TRIM ADDITIONAL TREES TO PROVIDE ADEQUATE CLEARANCE FOR VEHICLES.
40. NOT USED.

REV	DATE	BY	SUB	APR	DESCRIPTION

Stacy and Witbeck, Inc.
STV 100 Years

NOT FOR CONSTRUCTION

PREPARED BY J.TAMAYO
DRAWN BY J.TAMAYO
CHECKED BY S.MAGALLON
IN CHARGE A.SOKOL
DATE 3/18/2020

DESIGN PACKAGE 2
50% SUBMITTAL

MARCH 18, 2020

SONOMA-MARIN SMART AREA RAIL TRANSIT

WINDSOR EXTENSION

GRADE CROSSINGS
PLAN & PROFILE
AIRPORT BOULEVARD CROSSING
CPUC NO.# 005-59.90
SHEET 9 OF 44

CADD FILENAME GX101.dwg
SCALE 1"= 20'
CONTRACT NO. CV-DB-18-001
DWG. NO. GX101
MILEPOST 59.9

tamayoj Mar 30, 2020 - 2:32pm I:\Projects\4020430\4020430_0001\90_CAD Models and Sheets\05 Construction Packages\14 Windsor Extension\003 DWG\04 SHEETS\03 GradeCrossings\GX101.dwg

EXHIBIT A

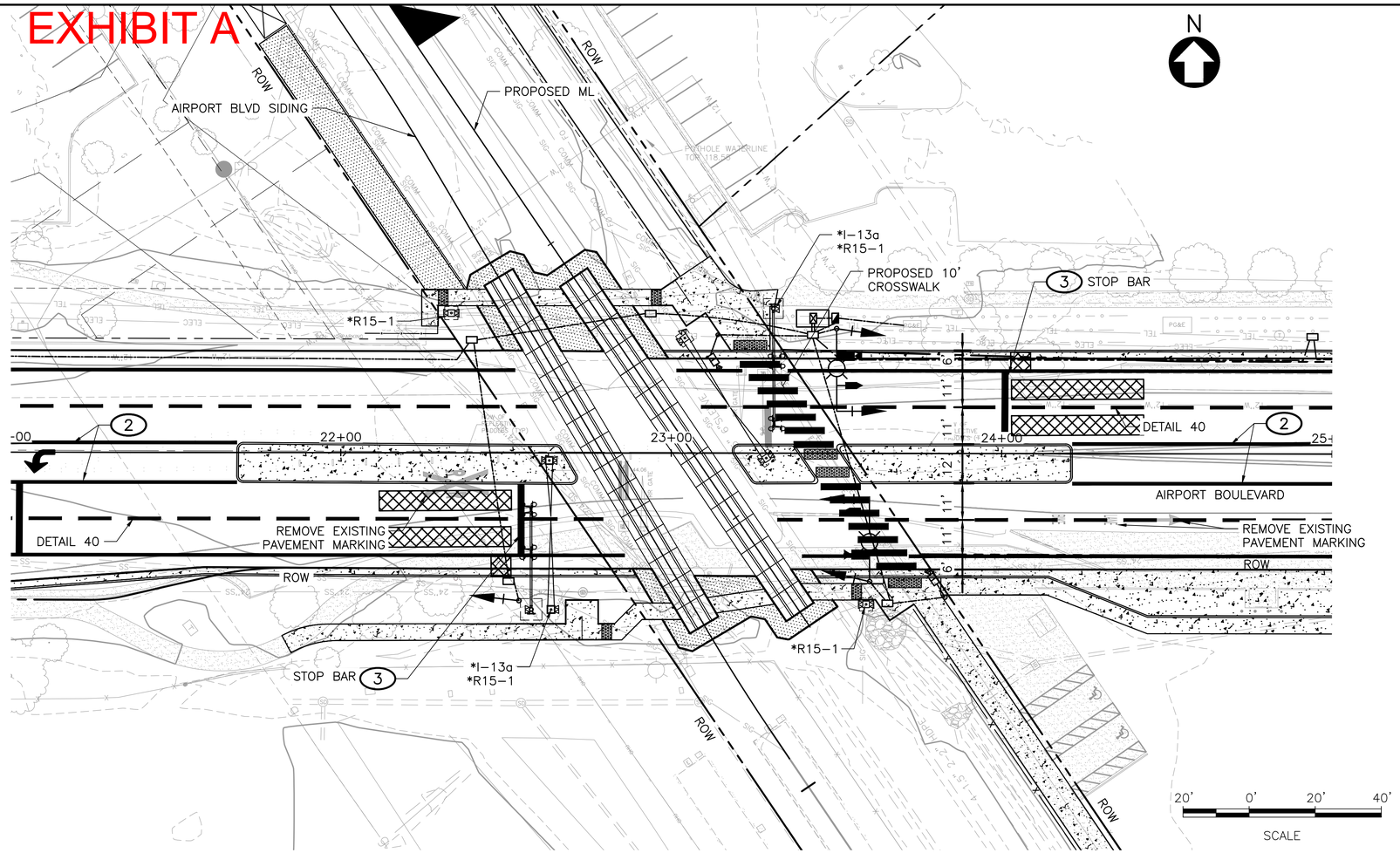

PLAN

SCALE: 1"=20'

SIGNING SCHEDULE

R1-1 STOP

R3-4

R4-7

R8-8 DO NOT STOP ON TRACK

R15-1 RAILROAD CROSSING

R15-2P 1 TRACKS

W10-1 R R

W10-2

W10-3

W10-4

W11-2

W31(CA) END

W16-9P AHEAD

W48(CA) 2 TRACKS

W53(CA) NOT A THROUGH STREET

TYPE 3 BARRICADE

OM4-1

TYPE Q MARKER
CALTRANS STD A73A

STRIPING SCHEDULE

1 4" WHITE STRIPE

3 24" WHITE STRIPE

2 12" WHITE STRIPE

4 PAVEMENT MARKING

DETAIL 8 SINGLE WHITE STRIPE PER CALTRANS STANDARD A20A

DETAIL 22 DOUBLE YELLOW STRIPES WITH PAVEMENT MARKERS PER CALTRANS STANDARD A20A

DETAIL 26 ONE WAY YELLOW REFLECTIVE MARKERS, SEE CALTRANS STANDARD A20B

DETAIL 40 WHITE LANE LINE EXTENSIONS, SEE CALTRANS STANDARD A20D

* SIGN: SIGN MOUNTED ON SIGNAL MAST

SIGN (E): EXISTING SIGN

CENTERLINES & EDGE LINES TO BE 4" IN WIDTH.

GENERAL NOTES:

1. SEE TYPICAL 'GRADE CROSSING DETAILS' DRAWINGS FOR PAVEMENT DELINEATION AND MARKINGS WITHIN THE CROSSINGS.
2. PAVEMENT MARKINGS ARE PER CALTRANS STANDARD PLANS LATEST EDITION.
3. SIGNS ARE PER CALIFORNIA MUTCD STANDARD UNLESS STATED OTHERWISE.
4. CROSSWALKS ARE 6'-0" WIDE UNLESS OTHERWISE SPECIFIED.
5. ALL EXISTING STREET SIGNS WITHIN SMART RIGHT OF WAY ARE TO REMAIN UNLESS FOUND CONFLICT WITH CROSSING IMPROVEMENTS. IN THIS CASE, THESE SIGNS ARE EITHER REMOVED, RELOCATED OR REPLACED PER DIRECTION OF FIELD ENGINEER WITH APPROVAL OF CITY OR COUNTY PUBLIC WORK DEPARTMENT.

REV	DATE	BY	SUB	APR	DESCRIPTION

Stacy and Witbeck, Inc.
STV 100 Years

NOT FOR CONSTRUCTION

PREPARED BY J.TAMAYO
DRAWN BY J.TAMAYO
CHECKED BY S.MAGALLON
IN CHARGE A.SOKOL
DATE 3/18/2020

DESIGN PACKAGE 2
50% SUBMITTAL

MARCH 18, 2020

SONOMA-MARIN SMART AREA RAIL TRANSIT

WINDSOR EXTENSION

GRADE CROSSINGS
SIGNAGE & STRIPING
AIRPORT BOULEVARD CROSSING
CPUC NO.# 005-59.90
SHEET 10 OF 44

CADD FILENAME GX102.dwg
SCALE 1"= 20'
CONTRACT NO. CV-DB-18-001
DWG. NO. GX102
MILEPOST 59.9

tamayoj Mar 18, 2020 - 11:38pm I:\Projects\4020430\4020430_0001\90_CAD Models and Sheets\05 Construction Packages\14 Windsor Extension\003 DWG\04 SHEETS\03 GradeCrossings\GX102.dwg

EXHIBIT A

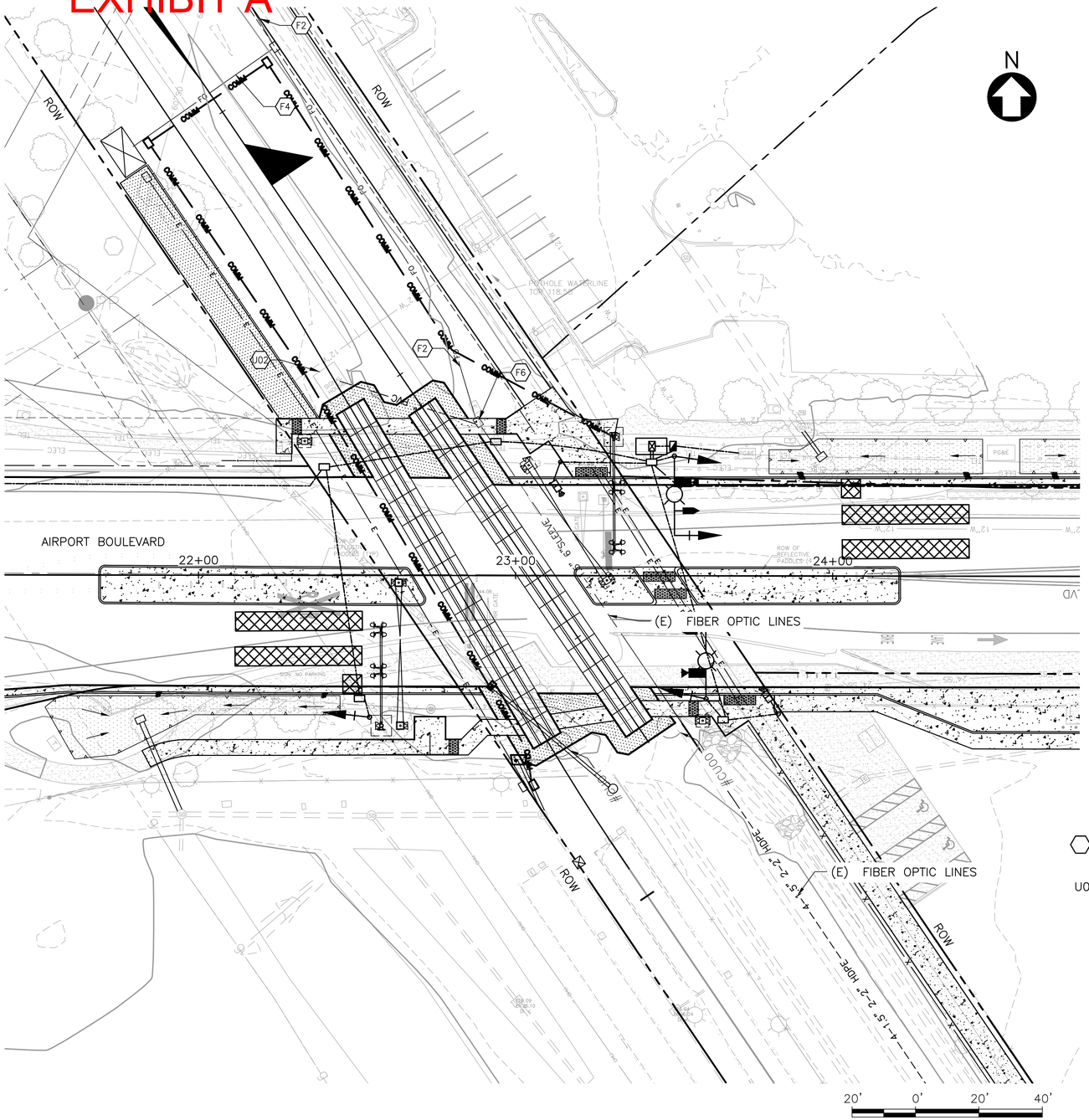

PLAN
SCALE: 1"=20'

UTILITY GENERAL NOTES

1. CROSSING UTILITIES ARE ILLUSTRATED AT CENTERLINE OF MAINLINE TRACK. LONGITUDINAL UTILITIES REFERENCE CENTERLINE AT ACTUAL LOCATION OF PIPELINE(S).

2. FACILITIES SHOWN ON PLANS HAVE BEEN IDENTIFIED BASED ON RECORD INFORMATION, ONLY. SMART HAS PERFORMED NO ACTUAL FIELD LOCATION AND THE INFORMATION SHOWN ON THESE PLANS MAY BE INACCURATE AND/OR INCOMPLETE. CONTRACTOR IS SOLELY RESPONSIBLE FOR LOCATING ALL UTILITIES AND DESIGNING PROTECTION MEASURES AS NECESSARY TO CONFORM WITH SMART DESIGN CRITERIA.

3. UTILITIES SHALL COMPLY WITH THE FOLLOWING STANDARDS:

A. STORM DRAIN: CALTRANS STANDARD PLANS AND SPECIFICATIONS.

B. SEWER: TOWN OF WINDSOR AND SONOMA COUNTY WATER AGENCY DESIGN AND CONSTRUCTION STANDARDS FOR SANITATION FACILITIES.

C. WATER: TOWN OF WINDSOR AND SONOMA COUNTY WATER AGENCY DESIGN AND CONSTRUCTION STANDARDS.

D. L.I.D.: BAY AREA STORMWATER MANAGEMENT AGENCIES ASSOCIATION (BASMAA) STANDARDS, POST–CONSTRUCTION MANUAL – DESIGN GUIDANCE FOR STORMWATER TREATMENT AND CONTROL FOR PROJECTS IN MARIN, SONOMA, NAPA AND SOLANO COUNTIES.

E. LIGHTING: SONOMA COUNTY STANDARD PLANS AND SPECIFICATIONS.

F. DRAINAGE STRUCTURES: AREMA STANDARDS (COOPER E–80) WHERE SUBJECT TO RAIL LOADING; CALTRANS STANDARDS (HS–25) WHERE SUBJECT TO ROADWAY OR OTHER RELATED LOADING.

5. SEE SYSTEMS PLANS FOR AC POWER AND COMMUNICATIONS WORK INCLUDED IN THIS CONTRACT, INCLUDING, BUT NOT LIMITED TO, AC POWER AT WINDSOR STATION, AC POWER TO CIL LOCATIONS.

6. ALL PAVING, INCLUDING PROPOSED PAVING, SHOWN SCREENED IN UTILITY PLANS.

7. FIBER OPTIC AND ELECTRICAL CONDUITS WILL BE COMBINED IN THE SAME TRENCH WHERE EVER POSSIBLE.

FIBER KEYNOTES

F2 MAINLINE DUCTBANK CONDUIT – (4) 1.5" HDPE SDR–11

F4 MAINLINE DUCTBANK CASING – (1) 6" PVC

F6 CONNECT FIBER CONDUITS TO EXISTING PULLBOX

UTILITY KEYNOTES (REFER TO UTILITY GENERAL NOTE 4)

U02 RELOCATE EXISTING PG&E SERVICE.

GRADE CROSSING	WEST OF TRACKS	EAST OF TRACKS
AIRPORT BOULEVARD	6 - 4" PVC SCH 80: 2 - VEHICLE GATES 1 - CANTILEVER 1 - IJ AND IS 1 - RAIL SIGNAL 1 - SPARE 2 - 2" PVC SCH 80: 1 - ROLLING GATE COMM 1 - ROLLING GATE PWR 2 - FOR COUNTY USE	4 - 4" PVC SCH 80: 1 - VEHICLE GATE 1 - PED FLASHER 1 - IJ AND IS 1 - SPARE 2 - 2" PVC SCH 80: 2 - FOR COUNTY USE

CONSTRUCTION NOTES:

1. CONCRETE MEDIAN
2. CURB & GUTTER PER SONOMA COUNTY DWG NO. 220.
3. CURB, GUTTER & SIDEWALK PER SONOMA COUNTY DWG NO. 220.
4. REPLACE CURB AND GUTTER IN KIND.
5. SIDEWALK PER SONOMA COUNTY DWG NO. 220.
6. PEDESTRIAN CURB CUT RAMP PER SONOMA COUNTY DWG NO. 224A.
7. REINFORCED CONCRETE PIPE PER CALTRANS STD A79
8. NON–MOTORIZED PATHWAY.
9. AC PAVEMENT
10. REMOVE SURFACE EVIDENCE OF EXISTING CROSSWALK MARKINGS AND PAVER SURFACE. MUST HAVE SERVICE LIFE OF AT LEAST 10 YEARS.
11. MOUNTABLE CURB AND REINFORCED SIDEWALK (MIN. 6" THICK PCC WITH #4 REBAR AT 12" EA WAY) AT CIL ACCESS ROAD
12. CIL ACCESS ROAD MINIMUM 6" THICK CLASS II AB, MAX 10% GRADE
13. TRAFFIC DETECTOR ZONES.
14. PROTECT EXISTING CURB AND GUTTER
15. PROTECT EXISTING DRIVEWAY
16. TRAFFIC SIGNAL
17. TRAFFIC MARKINGS AND STRIPING
18. CENTRAL INSTRUMENT HOUSING LOCATION (CIL)
19. PROTECT EXISTING SIDEWALK
21. 2" CONDUIT WITH PULLROPE FOR FUTURE SIGNAL INTERCONNECT. TERMINATE ADJACENT TO SIGNAL CONTROLLER. PULL BOXES INSTALLED AT <200 FEET OF CONDUIT
22. PEDESTRIAN WARNING DEVICE AND AUTOMATIC GATE ARM W/ FLASHER
23. FLASHING LIGHT SIGNAL ASSEMBLY.
24. REPLACE PAVEMENT MARKING IN KIND
25. FLASHING LIGHT SIGNAL ASSEMBLY WITH AUTOMATIC GATE ARM
26. FLASHING LIGHT SIGNAL ASSEMBLY OVER THE ROADWAY ON A CANTILEVERED ARM
27. PEDESTRIAN SWING GATE
28. 4' HIGH CHAIN LINK FENCE
29. CHANNELIZATION RAILING
30. 4' HIGH VINYL COATED CHAIN LINK FENCE
31. 6' HIGH CHAIN LINK FENCE
32. NOT USED
33. PRECAST CONCRETE PANEL CROSSING SYSTEM
34. REMOVE PAVEMENT MARKING BY GRINDING
35. POTENTIAL CONFLICTS TREE OR UTILITY
36. QWICK KURB
37. PEDESTRIAN BARRICADE (TYPE 1) PER CALTRANS STD ES7Q WITH BOLTED POSTS PER GX004
38. NEW COMMERCIAL DRIVEWAY PER TOW STD. PLAN 206.
39. REMOVE TREE. MINIMUM REQUIRED TREE REMOVAL SHOWN. CONTRACTOR MAY BE REQUIRED TO REMOVE OR TRIM ADDITIONAL TREES TO PROVIDE ADEQUATE CLEARANCE FOR VEHICLES.
40. NOT USED.

REV	DATE	BY	SUB	APR	DESCRIPTION

Stacy and Witbeck, Inc.
STV 100 Years

NOT FOR CONSTRUCTION

PREPARED BY J.TAMAYO
DRAWN BY J.TAMAYO
CHECKED BY S.MAGALLON
IN CHARGE A.SOKOL
DATE 3/18/2020

DESIGN PACKAGE 2
50% SUBMITTAL

MARCH 18, 2020

SONOMA-MARIN SMART AREA RAIL TRANSIT

WINDSOR EXTENSION

GRADE CROSSINGS
DRAINAGE & UTILITY PLAN
AIRPORT BOULEVARD CROSSING
CPUC NO.# 005–59.90
SHEET 11 OF 44

CADD FILENAME GX103.dwg
SCALE 1"= 20'
CONTRACT NO. CV–DB–18–001
DWG. NO. GX103
MILEPOST 59.9

Mar 30, 2020 – 2:53pm I:\Projects\4020430\4020430_0001\90_CAD Models and Sheets\05 Construction Packages\14 Windsor Extension\003 DWG\04 SHEETS\03 GradeCrossings\GX103.dwg
tamayoj

EXHIBIT A

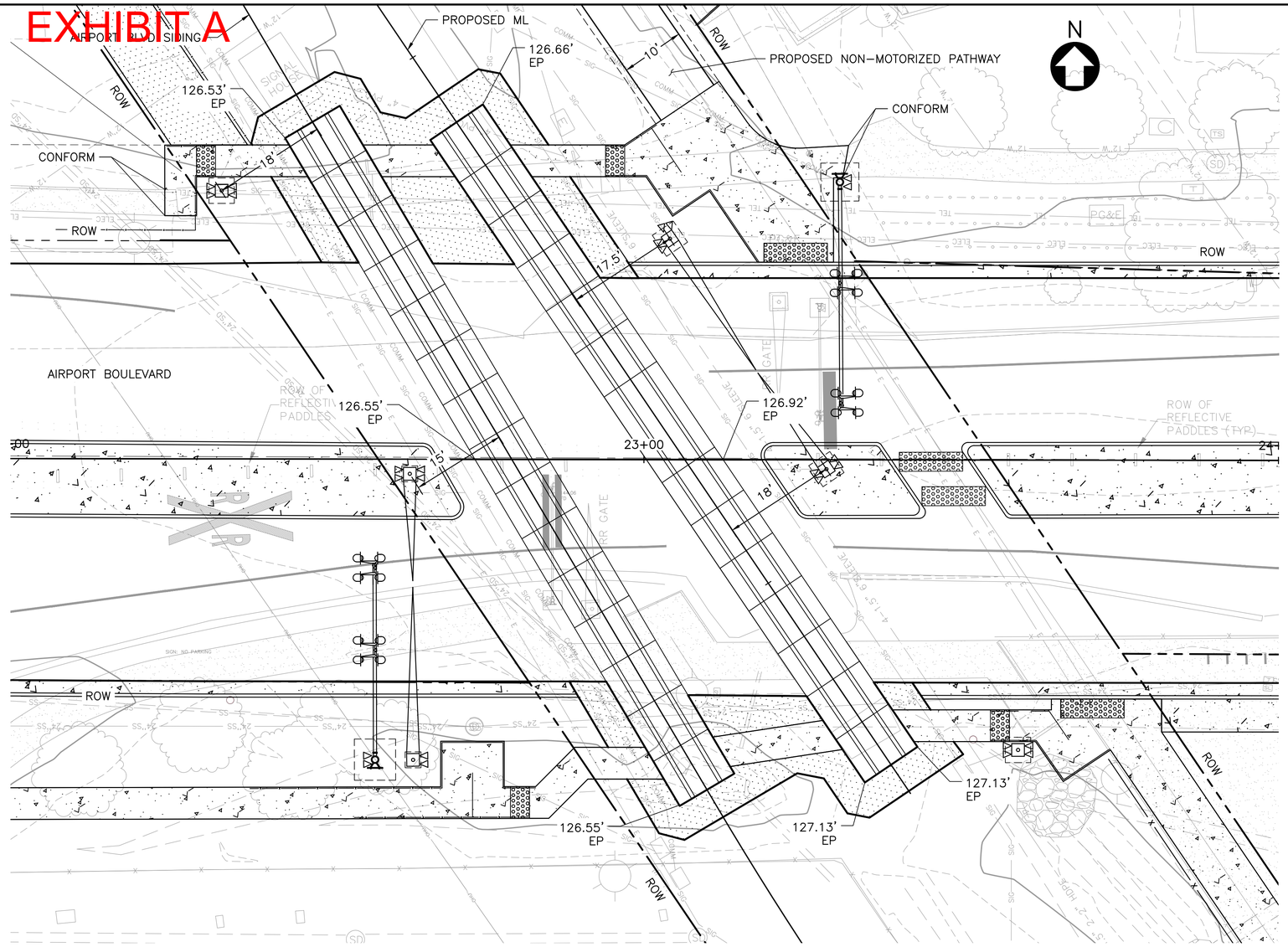

PLAN
SCALE: 1"=10'

NOTE:
1. FOR ROADWAY PROFILE, SEE GX101.

CONSTRUCTION NOTES:

1. CONCRETE MEDIAN
2. CURB & GUTTER PER SONOMA COUNTY DWG NO. 220.
3. CURB, GUTTER & SIDEWALK PER SONOMA COUNTY DWG NO. 220.
4. REPLACE CURB AND GUTTER IN KIND.
5. SIDEWALK PER SONOMA COUNTY DWG NO. 220.
6. PEDESTRIAN CURB CUT RAMP PER SONOMA COUNTY DWG NO. 224A.
7. REINFORCED CONCRETE PIPE PER CALTRANS STD A79
8. NON-MOTORIZED PATHWAY.
9. AC PAVEMENT
10. REMOVE SURFACE EVIDENCE OF EXISTING CROSSWALK MARKINGS AND PAVER SURFACE. MUST HAVE SERVICE LIFE OF AT LEAST 10 YEARS.
11. MOUNTABLE CURB AND REINFORCED SIDEWALK (MIN. 6" THICK PCC WITH #4 REBAR AT 12" EA WAY) AT CIL ACCESS ROAD
12. CIL ACCESS ROAD MINIMUM 6" THICK CLASS II AB, MAX 10% GRADE
13. TRAFFIC DETECTOR ZONES.
14. PROTECT EXISTING CURB AND GUTTER
15. PROTECT EXISTING DRIVEWAY
16. TRAFFIC SIGNAL
17. TRAFFIC MARKINGS AND STRIPING
18. CENTRAL INSTRUMENT HOUSING LOCATION (CIL)
19. PROTECT EXISTING SIDEWALK
21. 2" CONDUIT WITH PULLROPE FOR FUTURE SIGNAL INTERCONNECT. TERMINATE ADJACENT TO SIGNAL CONTROLLER. PULL BOXES INSTALLED AT <200 FEET OF CONDUIT
22. PEDESTRIAN WARNING DEVICE AND AUTOMATIC GATE ARM W/ FLASHER
23. FLASHING LIGHT SIGNAL ASSEMBLY.
24. REPLACE PAVEMENT MARKING IN KIND
25. FLASHING LIGHT SIGNAL ASSEMBLY WITH AUTOMATIC GATE ARM
26. FLASHING LIGHT SIGNAL ASSEMBLY OVER THE ROADWAY ON A CANTILEVERED ARM
27. PEDESTRIAN SWING GATE
28. 4' HIGH CHAIN LINK FENCE
29. CHANNELIZATION RAILING
30. 4' HIGH VINYL COATED CHAIN LINK FENCE
31. 6' HIGH CHAIN LINK FENCE
32. NOT USED
33. PRECAST CONCRETE PANEL CROSSING SYSTEM
34. REMOVE PAVEMENT MARKING BY GRINDING
35. POTENTIAL CONFLICTS TREE OR UTILITY
36. QWICK KURB
37. PEDESTRIAN BARRICADE (TYPE 1) PER CALTRANS STD ES7Q WITH BOLTED POSTS PER GX004
38. NEW COMMERCIAL DRIVEWAY PER TOW STD. PLAN 206.
39. REMOVE TREE. MINIMUM REQUIRED TREE REMOVAL SHOWN. CONTRACTOR MAY BE REQUIRED TO REMOVE OR TRIM ADDITIONAL TREES TO PROVIDE ADEQUATE CLEARANCE FOR VEHICLES.
40. NOT USED.

REV	DATE	BY	SUB	APR	DESCRIPTION

Stacy and Witbeck, Inc.
STV 100 Years

NOT FOR CONSTRUCTION

PREPARED BY J.TAMAYO
DRAWN BY J.TAMAYO
CHECKED BY S.MAGALLON
IN CHARGE A.SOKOL
DATE 3/18/2020

DESIGN PACKAGE 2
50% SUBMITTAL

MARCH 18, 2020

SONOMA-MARIN SMART AREA RAIL TRANSIT

WINDSOR EXTENSION
GRADE CROSSINGS
ROADWAY IMPROVEMENTS
AIRPORT BOULEVARD CROSSING
CPUC NO.# 005-59.90
SHEET 12 OF 44

CADD FILENAME GX104.dwg
SCALE 1"= 20'
CONTRACT NO. CV-DB-18-001
DWG. NO. GX104
MILEPOST 59.9

tamayoj Mar 18, 2020 - 11:41pm I:\Projects\4020430\4020430_00011\90_CAD Models and Sheets\05 Construction Packages\14 Windsor Extension\003 DWG\04 SHEETS\03 GradeCrossings\GX104.dwg

EXHIBIT A

MODEL 170 CONTROLLER ASSEMBLY
TRAFFIC PHASE DIAGRAM

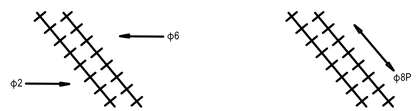

RAIL PREEMPTION

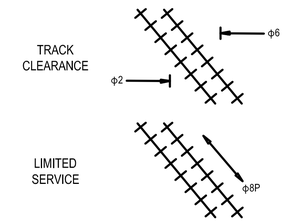

SIGNAL EQUIPMENT

NEW	EXISTING	
		PEDESTRIAN SIGNAL FACE
		TRAFFIC SIGNAL POLE
		VEHICLE SIGNAL FACE (WITH BACKPLATE, 3-SECTION: RED, YELLOW AND GREEN)
		CONTROLLER ASSEMBLY
		VIDEO DETECTION CAMERA
		OPTICOM MODEL 721
		PULL BOX
		CONDUIT
		VIDEO DETECTION ZONE
		SERVICE EQUIPMENT ENCLOSURE
		TS STANDARD WITH LUMINAIRE

SIGNAL GENERAL NOTES

1. THIS PLAN IS ACCURATE FOR ELECTRICAL WORK ONLY.
2. THE CONTRACTOR SHALL LOCATE ALL EXISTING UNDERGROUND UTILITIES PRIOR TO EXCAVATION OF POLE STANDARD FOUNDATIONS, CONTROLLER AND SERVICE EQUIPMENT, CONDUIT TRENCHING AND PULL BOX INSTALLATION ALONG WITH OTHER UNDERGROUND WORK SHOWN ON THE CONTRACT PLANS.
3. THE LOCATION OF PULL BOXES, POLE FOUNDATIONS, CONDUIT RUNS, AND OTHER EQUIPMENT SHOWN ON THE PLANS ARE APPROXIMATE AND MAY BE CHANGED TO SUIT FIELD CONDITIONS AS DIRECTED BY THE ENGINEER.
4. ALL TRAFFIC SIGNAL INDICATIONS SHALL BE 12" LED.
5. MULTIPLE UTILITY CONFLICTS MAY EXIST. ALL CONDUIT CROSSINGS SHALL BE POTHOLED.
6. ALL UNDERGROUND WORK SHALL BE COMPLETE PRIOR TO FINAL LIFT OR OVERLAY OF ASPHALT CONCRETE.

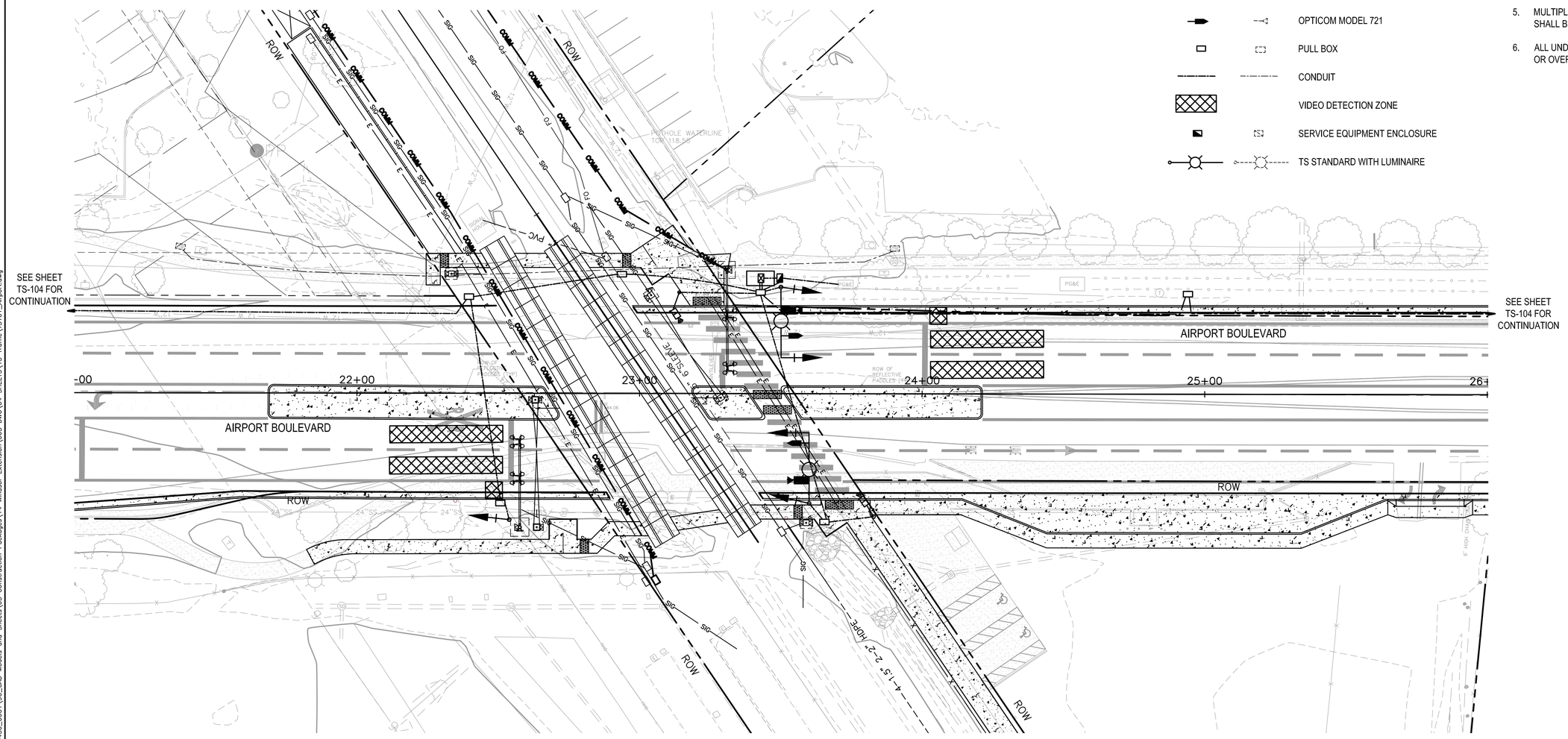

N

20' 0' 20' 40'
SCALE

REV	DATE	BY	SUB	APR	DESCRIPTION

Stacy and Witbeck, Inc.
STV 100 Years

NOT FOR CONSTRUCTION

PREPARED BY P. WESTCOTT
DRAWN BY K. MISNER
CHECKED BY M. GUILIANO
IN CHARGE A. SOKOL
DATE MAR 18, 2020

DESIGN PACKAGE 2
50% SUBMITTAL

MARCH 18, 2020

SONOMA-MARIN SMART AREA RAIL TRANSIT

WINDSOR EXTENSION

TRAFFIC SIGNALS
INSTALLATION PLAN
AIRPORT BOULEVARD GRADE CROSSING

SHEET 13 OF 44

CADD FILENAME TS101_Airport.dwg
SCALE 1"=20'
CONTRACT NO. CV-DB-18-001
DWG. NO. TS101
MILEPOST N/A

misnerke Mar 17, 2020 – 7:17am I:\Projects\4020430\4020430_0001\90_CAD Models and Sheets\05 Construction Packages\14 Windsor Extension\003 DWG\04 SHEETS\15 Traffic\TS101_Airport.dwg

EXHIBIT A

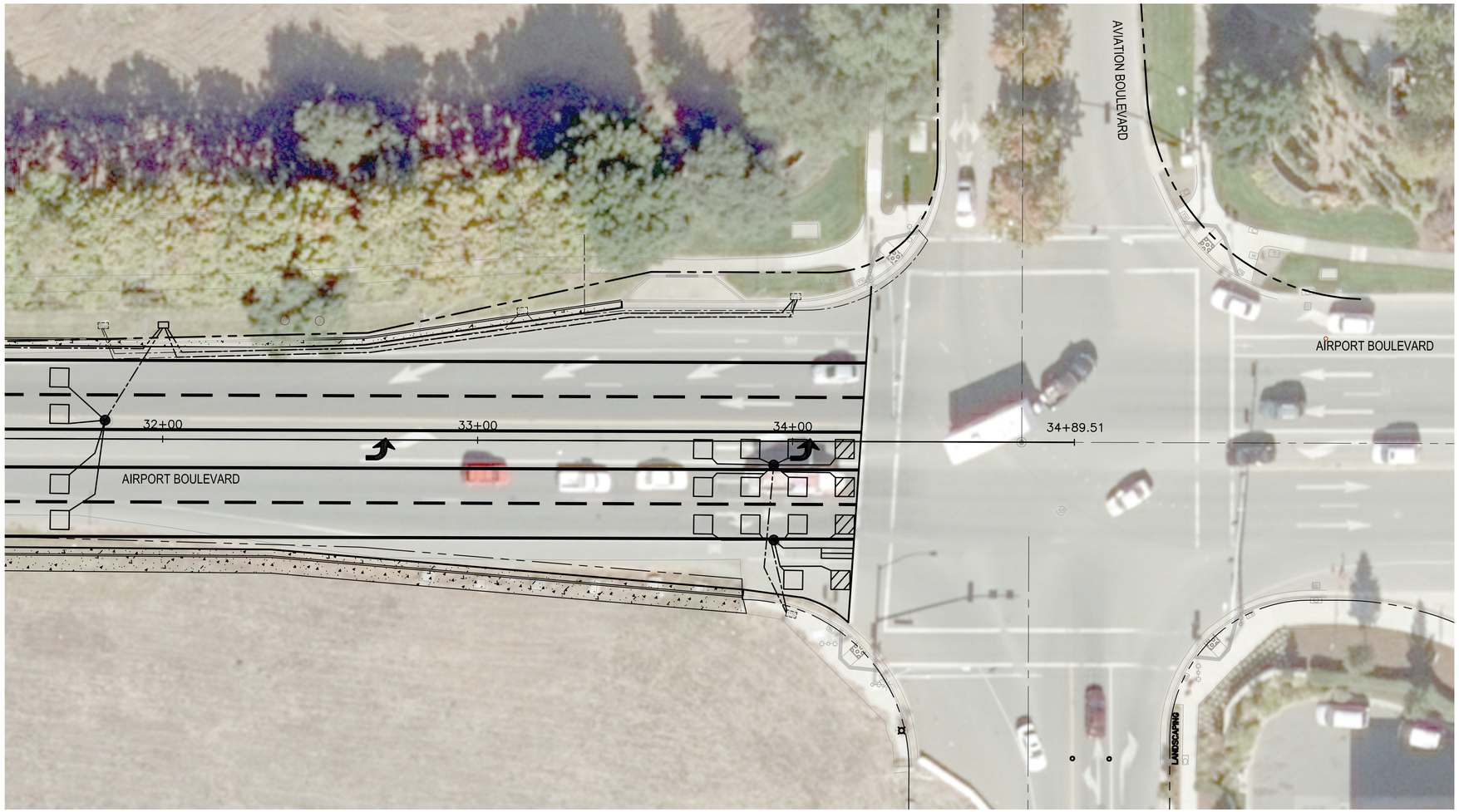

GENERAL NOTES

1. THIS PLAN IS ACCURATE FOR ELECTRICAL WORK ONLY.
2. ALL EXISTING DETECTOR LEAD-IN CABLES (DLC) ON AIRPORT BOULEVARD SHALL BE DISCONNECTED FROM EXISTING LOOPS PRIOR TO ANY ASPHALT GRINDING OR ASPHALT DIG OUT WORK BEGINS.
3. NEW DLC'S SHALL HAVE 6 FEET OF ADDITIONAL CABLE COILED IN PULL BOXES.
4. TRAFFIC SIGNAL AND HIGHWAY LIGHTING SHALL CONFORM TO THE LATEST EDITION CALTRANS STANDARD SPECIFICATIONS AND SPECIAL PROVISIONS.
5. G5 LIDS SHALL READ "DETECTOR".
6. ENGINEER WILL PROVIDE LOCATION OF BICYCLE LEGENDS TO REPLACE AT INTERSECTION (1 TOTAL).

SIGNAL EQUIPMENT

NEW	EXISTING	
		PULL BOX
		CONDUIT
		TYPE A LOOP DETECTOR
		TYPE C LOOP DETECTOR
		TYPE D LOOP DETECTOR
		DETECTOR HANDHOLE

N

20' 0' 20' 40'

SCALE

REV	DATE	BY	SUB	APR	DESCRIPTION

Stacy and Witbeck, Inc.

STV 100 Years

NOT FOR CONSTRUCTION

PREPARED BY P. WESTCOTT
DRAWN BY K. MISNER
CHECKED BY M. GUILIANO
IN CHARGE A. SOKOL
DATE MAR 18, 2020

DESIGN PACKAGE 2
50% SUBMITTAL

MARCH 18, 2020

SONOMA-MARIN SMART AREA RAIL TRANSIT

WINDSOR EXTENSION

TRAFFIC SIGNALS
LOOP PLAN
AIRPORT BOULEVARD AT AVIATION BOULEVARD

SHEET 14 OF 44

CADD FILENAME TS103_Airport_Loop.dwg
SCALE 1"=20'
CONTRACT NO. CV-DB-18-001
DWG. NO. TS103
MILEPOST N/A

misnerka Mar 17, 2020 – 7:19am i:\Projects\4020430\4020430_00011\90_CAD Models and Sheets\05 Construction Packages\14 Windsor Extension\003 DWG\04 SHEETS\15 Traffic\TS103_Airport_Loop.dwg

EXHIBIT A

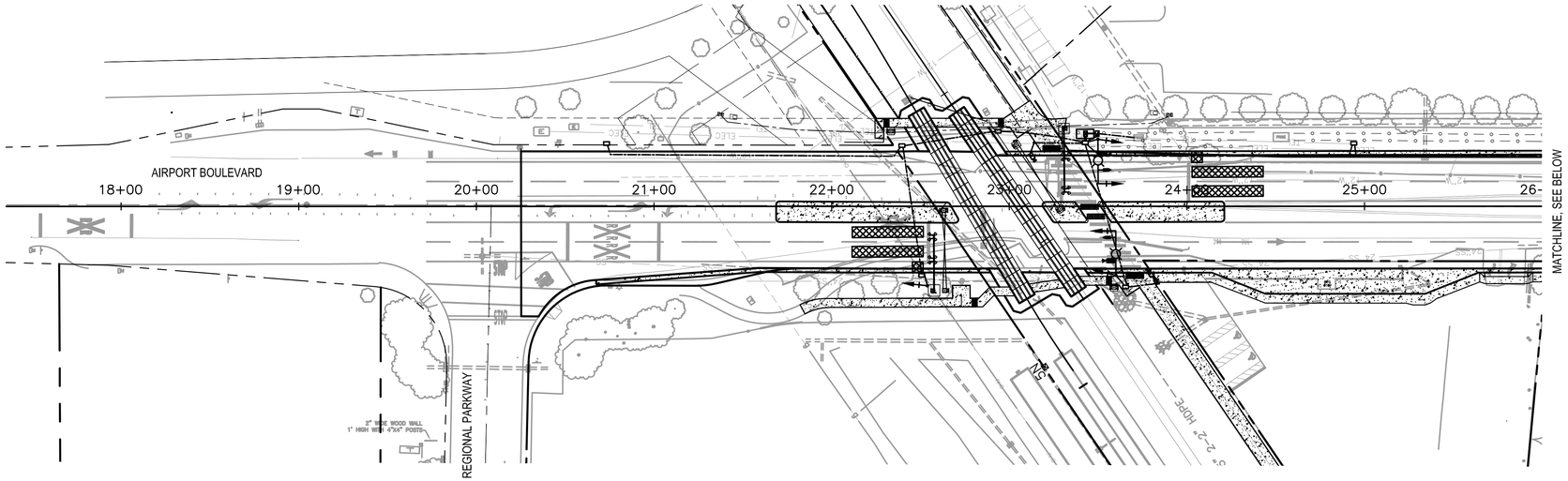

GENERAL NOTES

1. THIS SHEET APPLICABLE FOR ELECTRICAL WORK ONLY.
2. TRAFFIC SIGNAL EQUIPMENT SHALL CONFORM TO THE LATEST EDITION CALTRANS STANDARD PLANS AND SPECIFICATIONS.
3. ALL PULLBOXES SHALL BE 5T. INSTALL PER CALTRANS STD PLAN ES-8B. OUTSIDE CONCRETE COLLAR SHALL BE 12".
4. ALL PULLBOXES SHALL BE SET TO NEW FINISHED GRADE.
5. PULLBOX LIDS SHALL READ "INTERCONNECT".
6. CONDUIT SHALL BE PLACED AT LIP OF GUTTER.
7. CONDUIT ENDS SHALL HAVE SOLID CAPS WITH HOLES DRILLED IN ENDS FOR MULE TAPE AND 1-#12 SOLID THW WIRE TO PASS THROUGH.
8. ALL #12 SOLID THW WIRE SHALL BE SPLICED TOGETHER USING COMPRESSION CONNECTORS AND SEALED PER CALTRANS STD PLAN ES-13A.
9. CONDUIT SHALL BE GALVANIZED RIGID STEEL OR RIGID NON-METALLIC SCHEDULE 40 (PVC).
10. ALL UNDERGROUND CONDUIT SHALL BE PLACED IN TRENCH 30" DEEP. CONDUIT INSTALLED IN AC SHALL BE BACKFILLED WITH CONCRETE PRIOR TO FINAL LIFT OF AC BEING INSTALLED.

SIGNAL EQUIPMENT

NEW	EXISTING	
▭	⬚	PULL BOX
———	—·—·—	CONDUIT

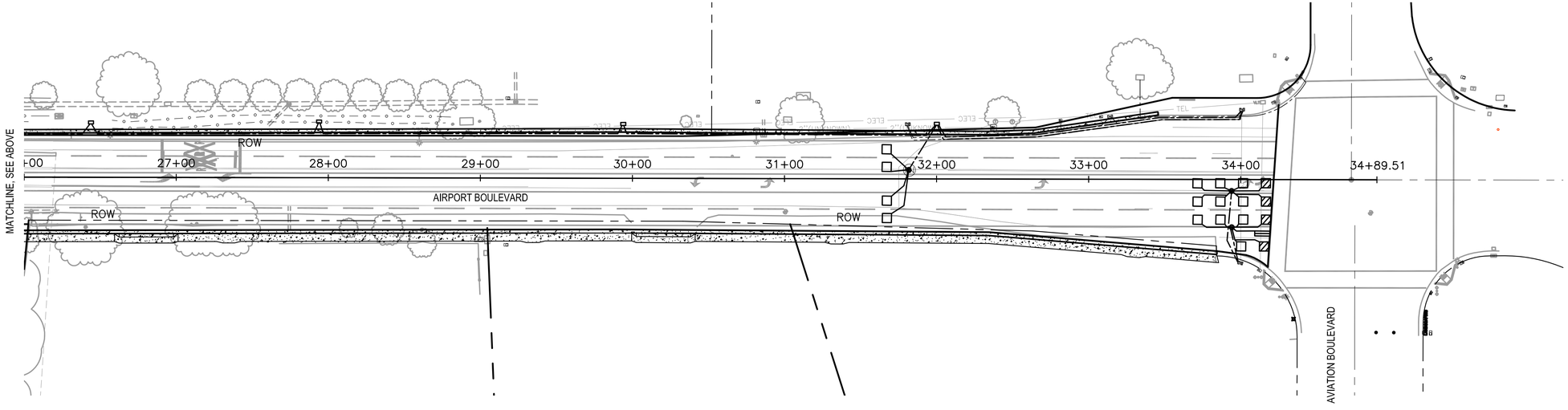

N

40' 0' 40' 80'
SCALE

REV	DATE	BY	SUB	APR	DESCRIPTION

Stacy and Witbeck, Inc.
STV 100 Years

NOT FOR CONSTRUCTION

PREPARED BY P. WESTCOTT
DRAWN BY K. MISNER
CHECKED BY M. GUILIANO
IN CHARGE A. SOKOL
DATE MAR 18, 2020

DESIGN PACKAGE 2
50% SUBMITTAL

MARCH 18, 2020

SONOMA-MARIN SMART AREA RAIL TRANSIT

WINDSOR EXTENSION

TRAFFIC SIGNALS
AIRPORT BOULEVARD
CONDUIT RUN

SHEET 15 OF 44

CADD FILENAME TS104_Airport_IC.dwg
SCALE AS NOTED
CONTRACT NO. CV-DB-18-001
DWG. NO. TS104
MILEPOST N/A

misnerko Mar 30, 2020 – 7:08am I:\Projects\4020430\4020430_0001\90_CAD Models and Sheets\05 Construction Packages\14 Windsor Extension\003 DWG\04 SHEETS\15 Traffic\TS104_Airport_IC.dwg

EXHIBIT A

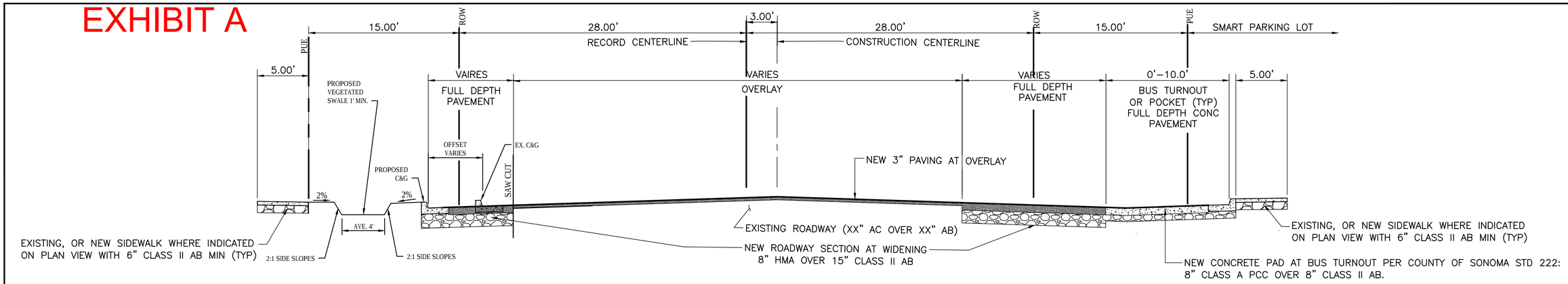

1 GX005 AIRPORT BLVD TYPICAL SECTION WITH BUS TURNOUT STA 20+72–22+30, 24+14–25+64

SCALE: 1"=5'

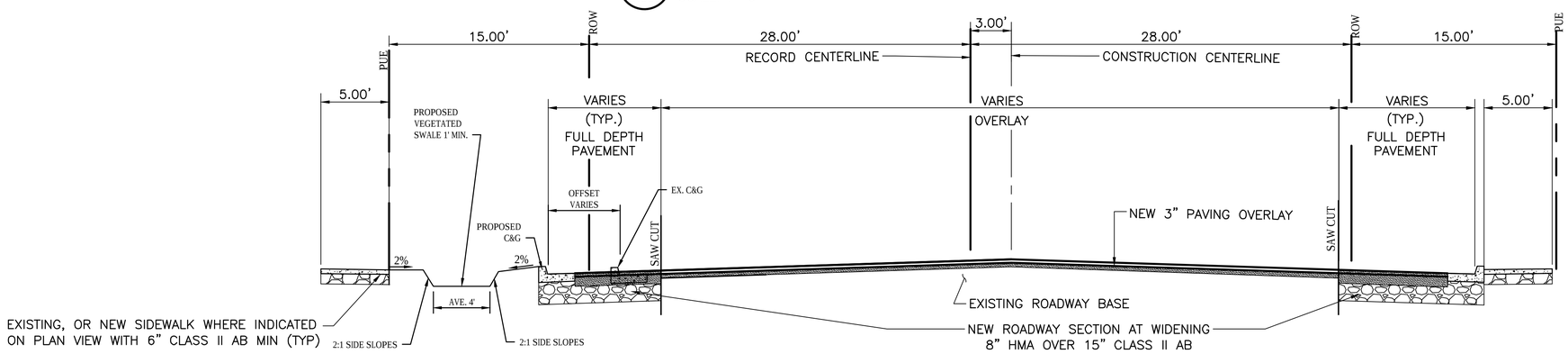

2 GX005 AIRPORT BLVD TYPICAL SECTION WHERE NO BUS TURNOUT

SCALE: 1"=5'

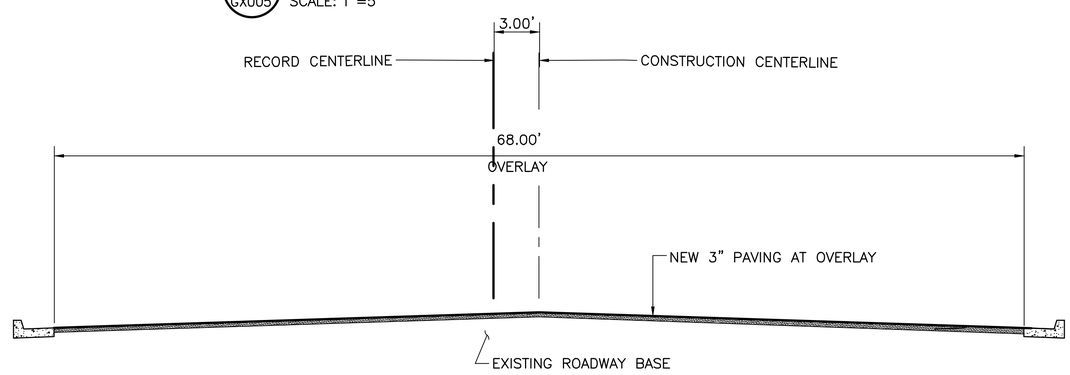

3 GX005 AIRPORT BLVD TYPICAL SECTION WEST OF GRADE CROSSING

SCALE: 1"=5'

REV	DATE	BY	SUB	APR	DESCRIPTION

Stacy and Witbeck, Inc.

STV 100 Years

NOT FOR CONSTRUCTION

PREPARED BY M. CAPUNO
DRAWN BY M. CAPUNO
CHECKED BY K. TAYLOR
IN CHARGE A. SOKOL
DATE MAR 18, 2020

DESIGN PACKAGE 2
50% SUBMITTAL

MARCH 18, 2020

SONOMA-MARIN SMART AREA RAIL TRANSIT

WINDSOR EXTENSION

ROAD IMPROVEMENTS
TYPICAL SECTION AND DETAILS
AIRPORT BOULEVARD

SHEET 16 OF 44

CADD FILENAME 01 – RD001.dwg
SCALE 1"= 5'
CONTRACT NO. CV–DB–18–001
DWG. NO. RD001
MILEPOST 59.9

CapunoMJ Mar 27, 2020 – 11:37am I:\Projects\4020430\4020430_0001\90_CAD Models and Sheets\05 Construction Packages\14 Windsor Extension\003 DWG\04 SHEETS\06 Civil\01 – RD001.dwg

EXHIBIT A

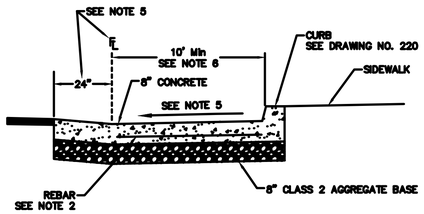

NOTES:

1. CONCRETE SHALL BE MINOR CONCRETE.
2. PLACE REBAR IN CONCRETE PAD AS FOLLOWS:
   #4 AT 12" ON CENTER EACH WAY, OR
   #5 AT 16" ON CENTER EACH WAY.
   REBAR SHALL BE PLACED 3" FROM BOTTOM OF CONCRETE SLAB.
3. CONSTRUCT EXPANSION JOINTS AND WEAKENED PLANE JOINTS PER DRAWING NO. 222.
4. CLASS 2 AGGREGATE BASE SHALL BE COMPACTED TO 95% RELATIVE COMPACTION.
5. SEE APPROVED PLANS FOR SLAB DRAINAGE DETAILS.
6. 12' WHERE DIRECTED BY SONOMA COUNTY TRANSIT; REFER TO APPROVED PLANS.
7. CONSTRUCTION SHALL CONFORM TO SONOMA COUNTY TRANSIT LAYOUT REQUIREMENTS AND THE APPROVED PLANS.

COUNTY OF SONOMA DEPARTMENT OF TRANSPORTATION AND PUBLIC WORKS		
BUS STOP TURNOUT TYPICAL SECTION (URBAN)		
DATE: AUG. 2018	REVISED:	
APPROVED BY:	SCALE: NONE	DRAWING NO. 216

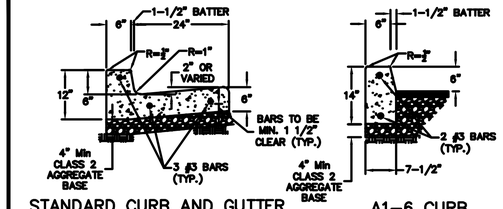

STANDARD CURB AND GUTTER

A1-6 CURB

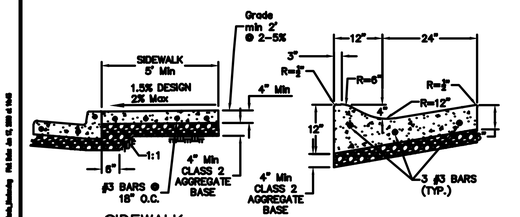

SIDEWALK

ROLLED CURB AND GUTTER

NOTES:

1. CONCRETE SHALL BE MINOR CONCRETE. CONTAINING SIX SACKS OF CEMENT PER CUBIC YARD MEETS THIS CRITERION.
2. BASE MATERIAL SHALL BE COMPACTED TO A RELATIVE COMPACTION OF 95%.
3. SEE DRAWING NO. 222 FOR REQUIREMENTS RELATED TO WEAKENED PLANES, SCORE MARKS AND EXPANSION JOINTS.
4. WHEN JOINING TO EXISTING SIDEWALKS AND CURBS, DRILL 12" INTO EXISTING SIDEWALKS AND CURBS AND PLACE No.4x24" STEEL BAR INTO EXISTING AND NEW CONCRETE CURB AND GUTTER.
5. WHEN REMOVING EXISTING SIDEWALK, REMOVAL SHALL EXTEND TO THE NEAREST SCORE MARK OR EXPANSION JOINT. SEE DRAWING NO. 223 FOR JOINT REQUIREMENTS.

COUNTY OF SONOMA DEPARTMENT OF TRANSPORTATION AND PUBLIC WORKS		
CURB, GUTTER AND SIDEWALK		
DATE: MAY 2004	REVISED: MAY 2018	
APPROVED BY:	SCALE: NONE	DRAWING NO. 220

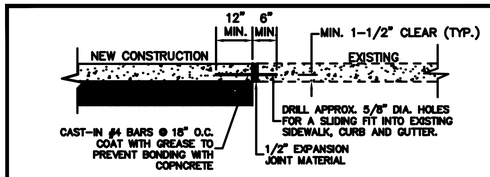

SECTION A-A

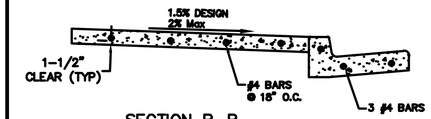

SECTION B-B

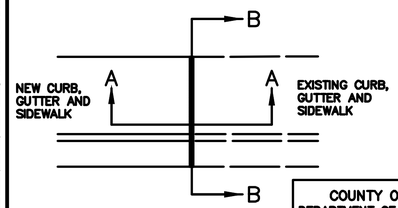

PLAN

COUNTY OF SONOMA DEPARTMENT OF TRANSPORTATION AND PUBLIC WORKS		
CURB, GUTTER AND SIDEWALK EXPANSION JOINT NEW TO EXISTING		
DATE: MAY 2004	REVISED: JULY 2018	
APPROVED BY:	SCALE: NONE	DRAWING NO. 223

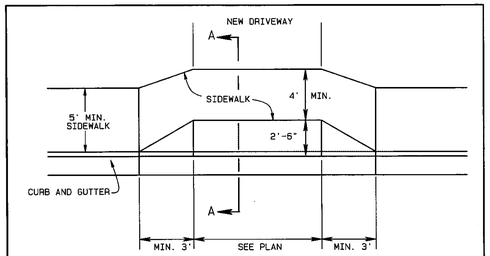

PLAN

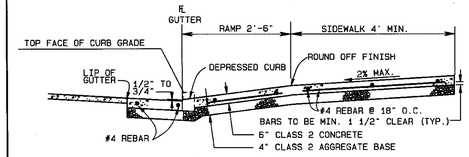

SECTION A-A

NOTES:

1. REBAR TO BE PLACED IN THAT PORTION OF DRIVEWAYS LOCATED WITHIN THE RIGHT OF WAY.
2. BASE MATERIAL SHALL BE COMPACTED TO A RELATIVE COMPACTION OF 95%.
3. CONSTRUCT A WEAKENED PLANE JOINT AT THE CENTER OF THE DRIVEWAY (1/8" WIDE BY 1" DEEP). CONSTRUCT SCORE MARKS AT A MAXIMUM SPACING OF 5 FEET.
4. AS AN ALTERNATE ON COMMERCIAL DRIVEWAYS, THE SIDEWALK GRADE THROUGH THE DRIVEWAY MAY BE DEPRESSED 2". THE SIDEWALK GRADE TRANSIITIONS SHALL BE ACCOMPLISHED IN THE 4-FOOT OFFSET SECTION.
5. CONCRETE CONTAINING SIX SACKS OF CEMENT PER CUBIC YARD MEETS THE CRITERION FOR CLASS 2 CONCRETE.

COUNTY OF SONOMA DEPARTMENT OF TRANSPORTATION AND PUBLIC WORKS		
URBAN DRIVEWAY LIGHT USE COMMERCIAL AND RESIDENTIAL		
DATE: MAY 2004	REVISED: FEB. 2009	
APPROVED BY:	SCALE: NONE	DRAWING NO. 808

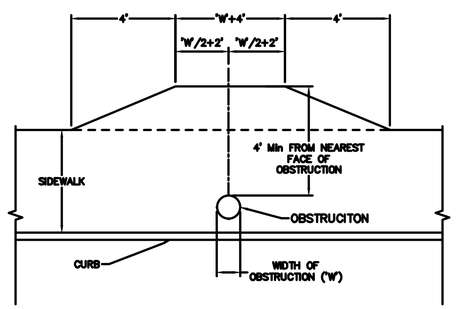

NOTES:

1. WALK TRANSITIONS AT TREES ARE TO BE CONSTRUCTED PER APPROVED PLANS.

COUNTY OF SONOMA DEPARTMENT OF TRANSPORTATION AND PUBLIC WORKS		
TYPICAL SIDEWALK OBSTRUCTION TRANSITION		
DATE: MAY 2004	REVISED: JULY 2018	
APPROVED BY:	SCALE: NONE	DRAWING NO. 226

REV	DATE	BY	SUB	APR	DESCRIPTION

Stacy and Witbeck, Inc.

STV 100 Years

NOT FOR CONSTRUCTION

PREPARED BY M. CAPUNO
DRAWN BY M. CAPUNO
CHECKED BY K. TAYLOR
IN CHARGE A. SOKOL
DATE MAR 18, 2020

DESIGN PACKAGE 2
50% SUBMITTAL

MARCH 18, 2020

SONOMA-MARIN SMART AREA RAIL TRANSIT

WINDSOR EXTENSION

ROAD IMPROVEMENTS
CONSTRUCTION DETAIL SHEET 1 OF 2
AIRPORT BOULEVARD

SHEET 17 OF 44

CADD FILENAME 02 – RD002.dwg	
SCALE 1"= 20'	CONTRACT NO. CV-DB-18-001
DWG. NO. RD002	MILEPOST 59.9

EXHIBIT A

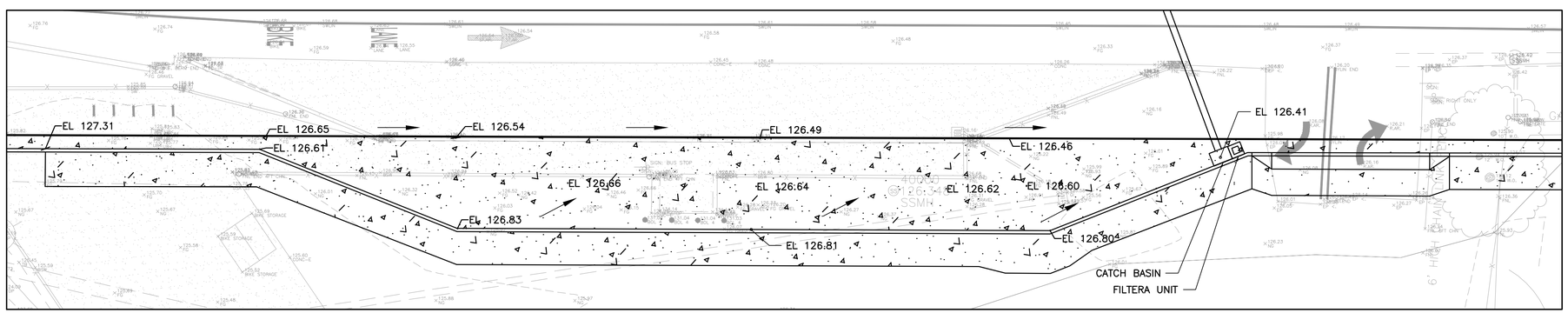

1 RD003 BUS TURNOUT DETAIL
SCALE: 1"=10'

REV	DATE	BY	SUB	APR	DESCRIPTION

Stacy and Witbeck, Inc.
STV 100 Years

NOT FOR CONSTRUCTION

PREPARED BY M. CAPUNO
DRAWN BY M. CAPUNO
CHECKED BY K. TAYLOR
IN CHARGE A. SOKOL
DATE MAR 18, 2020

DESIGN PACKAGE 2
50% SUBMITTAL

MARCH 18, 2020

SONOMA-MARIN SMART AREA RAIL TRANSIT

WINDSOR EXTENSION
ROAD IMPROVEMENTS
CONSTRUCTION DETAIL SHEET 2 OF 2
AIRPORT BOULEVARD

SHEET 18 OF 44

CADD FILENAME 03 – RD003.dwg
SCALE 1"= 10'
CONTRACT NO. CV-DB-18-001
DWG. NO. RD003
MILEPOST 59.9

EXHIBIT A

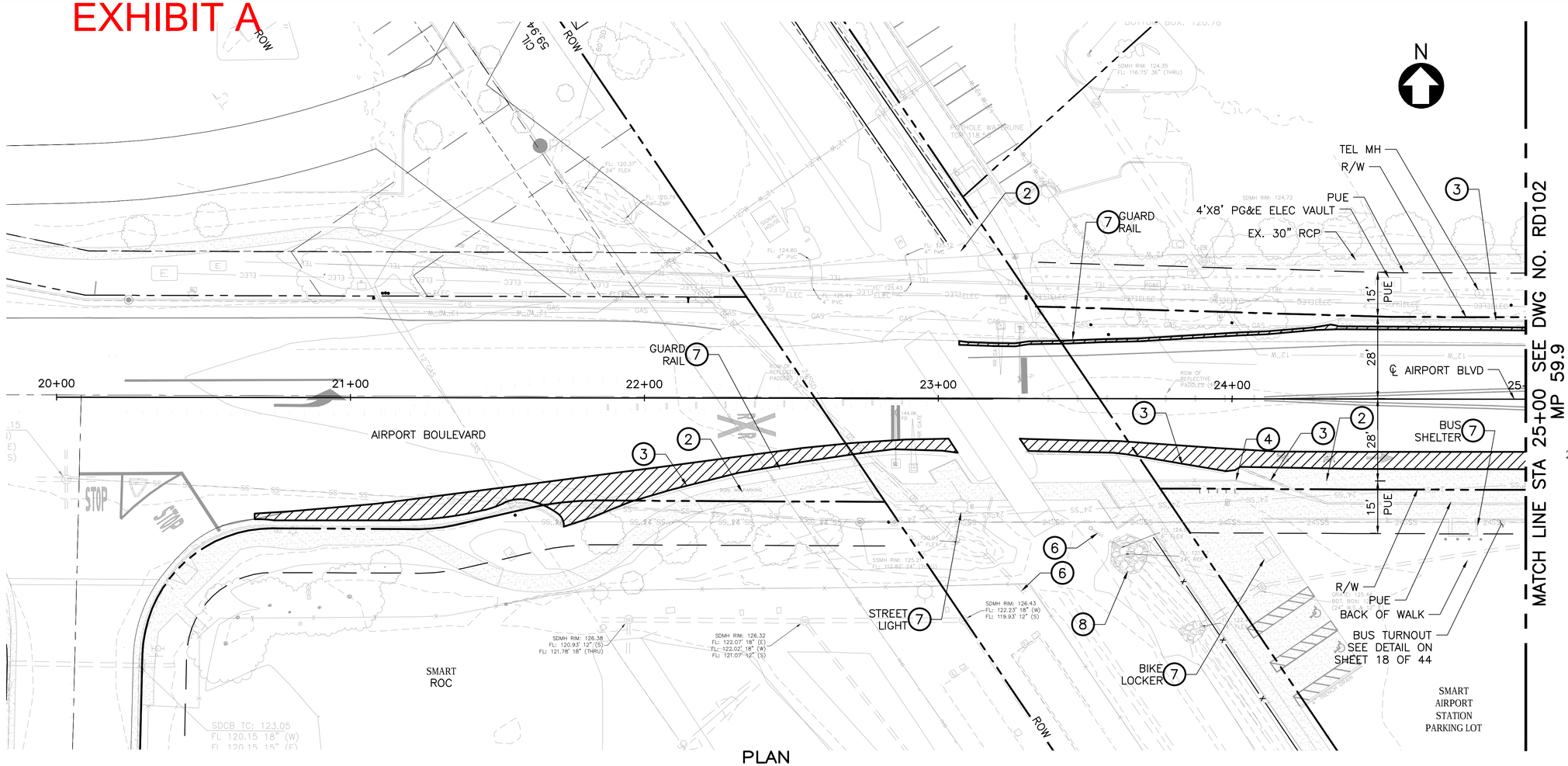

CONSTRUCTION NOTES:

1. PROTECT
2. REMOVE CONCRETE SIDEWALK
3. REMOVE CONCRETE CURB OR CURB AND GUTTER OR AC CURB
4. REMOVE CHAIN LINK OR WOOD FENCE OR RAILING
5. REMOVE EXISTING CATCH BASIN
6. REMOVE DRAINAGE PIPE
7. SALVAGE (ITEM AS NOTED)
8. REMOVE RIPRAP

SAW CUT AND REMOVE FULL DEPTH PAVEMENT

PLAN

SCALE: 1"=20'

REV	DATE	BY	SUB	APR	DESCRIPTION

Stacy and Witbeck, Inc.
STV 100 Years

NOT FOR CONSTRUCTION

PREPARED BY M. CAPUNO
DRAWN BY M. CAPUNO
CHECKED BY K. TAYLOR
IN CHARGE A. SOKOL
DATE MAR 18, 2020

DESIGN PACKAGE 2
50% SUBMITTAL

MARCH 18, 2020

SONOMA-MARIN SMART AREA RAIL TRANSIT

WINDSOR EXTENSION

ROAD IMPROVEMENTS
DEMOLITION PLAN 1 OF 3
AIRPORT BOULEVARD

SHEET 19 OF 44

CADD FILENAME 04 – RD101.dwg
SCALE 1"= 20'
CONTRACT NO. CV-DB-18-001
DWG. NO. RD101
MILEPOST 59.9

CapunoMJ Mar 30, 2020 – 2:16pm I:\Projects\4020430\4020430_0001\90_CAD Models and Sheets\05 Construction Packages\14 Windsor Extension\003 DWG\04 SHEETS\06 Civil\04 – RD101.dwg

EXHIBIT A

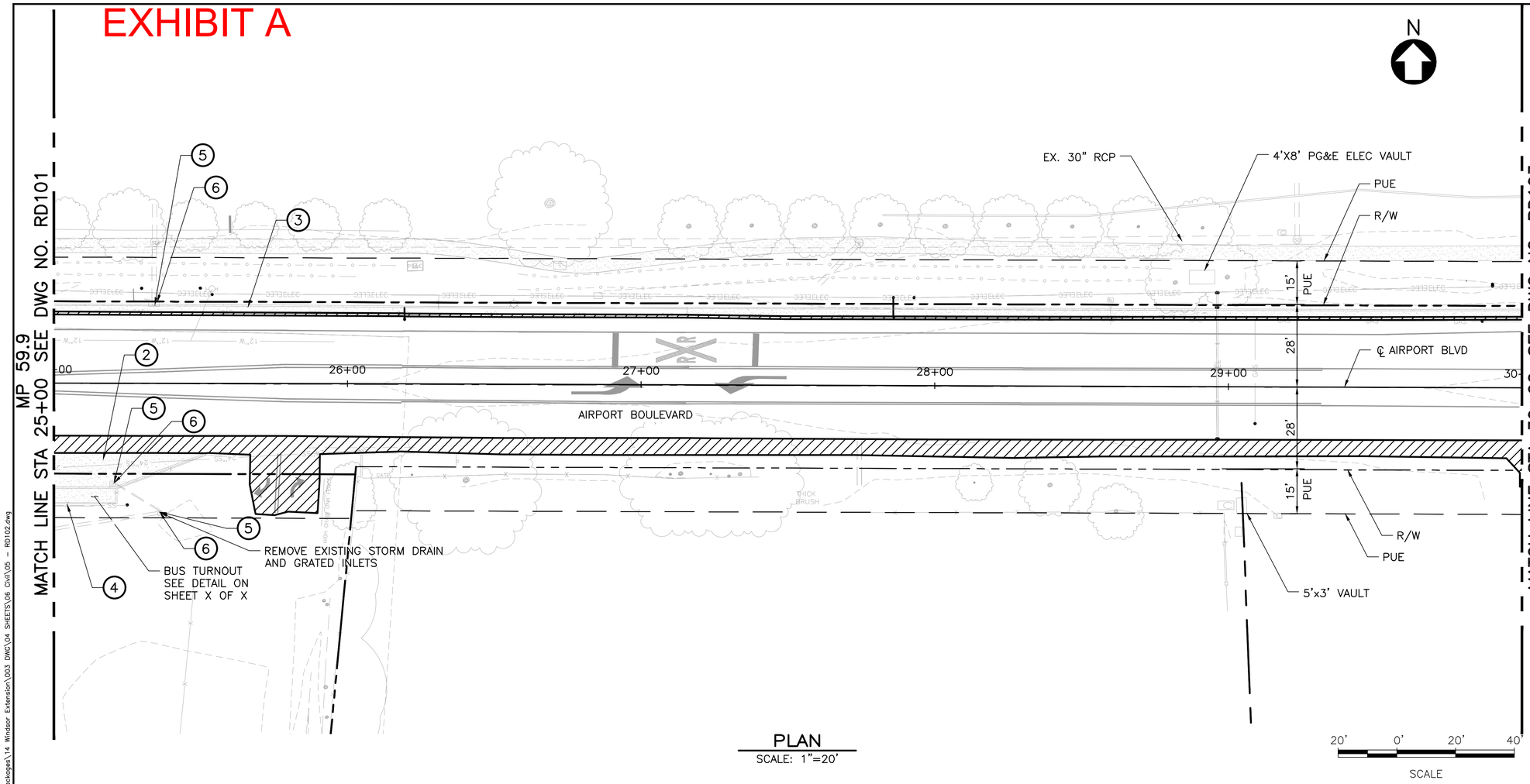

PLAN
SCALE: 1"=20'

CONSTRUCTION NOTES:

1. PROTECT
2. REMOVE CONCRETE SIDEWALK
3. REMOVE CONCRETE CURB OR CURB AND GUTTER OR AC CURB
4. REMOVE CHAIN LINK OR WOOD FENCE OR RAILING
5. REMOVE EXISTING CATCH BASIN
6. REMOVE DRAINAGE PIPE
7. SALVAGE (ITEM AS NOTED)

SAW CUT AND REMOVE FULL DEPTH PAVEMENT

REV	DATE	BY	SUB	APR	DESCRIPTION

Stacy and Witbeck, Inc.
STV 100 Years

NOT FOR CONSTRUCTION

PREPARED BY M. CAPUNO
DRAWN BY Z. OHN
CHECKED BY K. TAYLOR
IN CHARGE A. SOKOL
DATE MAR 18, 2020

DESIGN PACKAGE 2
50% SUBMITTAL

MARCH 18, 2020

SONOMA-MARIN SMART AREA RAIL TRANSIT

WINDSOR EXTENSION
ROAD IMPROVEMENTS
DEMOLITION PLAN 2 OF 3
AIRPORT BOULEVARD

SHEET 20 OF 44

CADD FILENAME 05 – RD102.dwg
SCALE 1"= 20'
CONTRACT NO. CV-DB-18-001
DWG. NO. RD102
MILEPOST 59.9

CapuinoMJ Mar 27, 2020 – 11:41am I:\Projects\4020430\4020430_0001\90_CAD Models and Sheets\05 Construction Packages\14 Windsor Extension\003 DWG\04 SHEETS\06 Civil\05 – RD102.dwg

EXHIBIT A

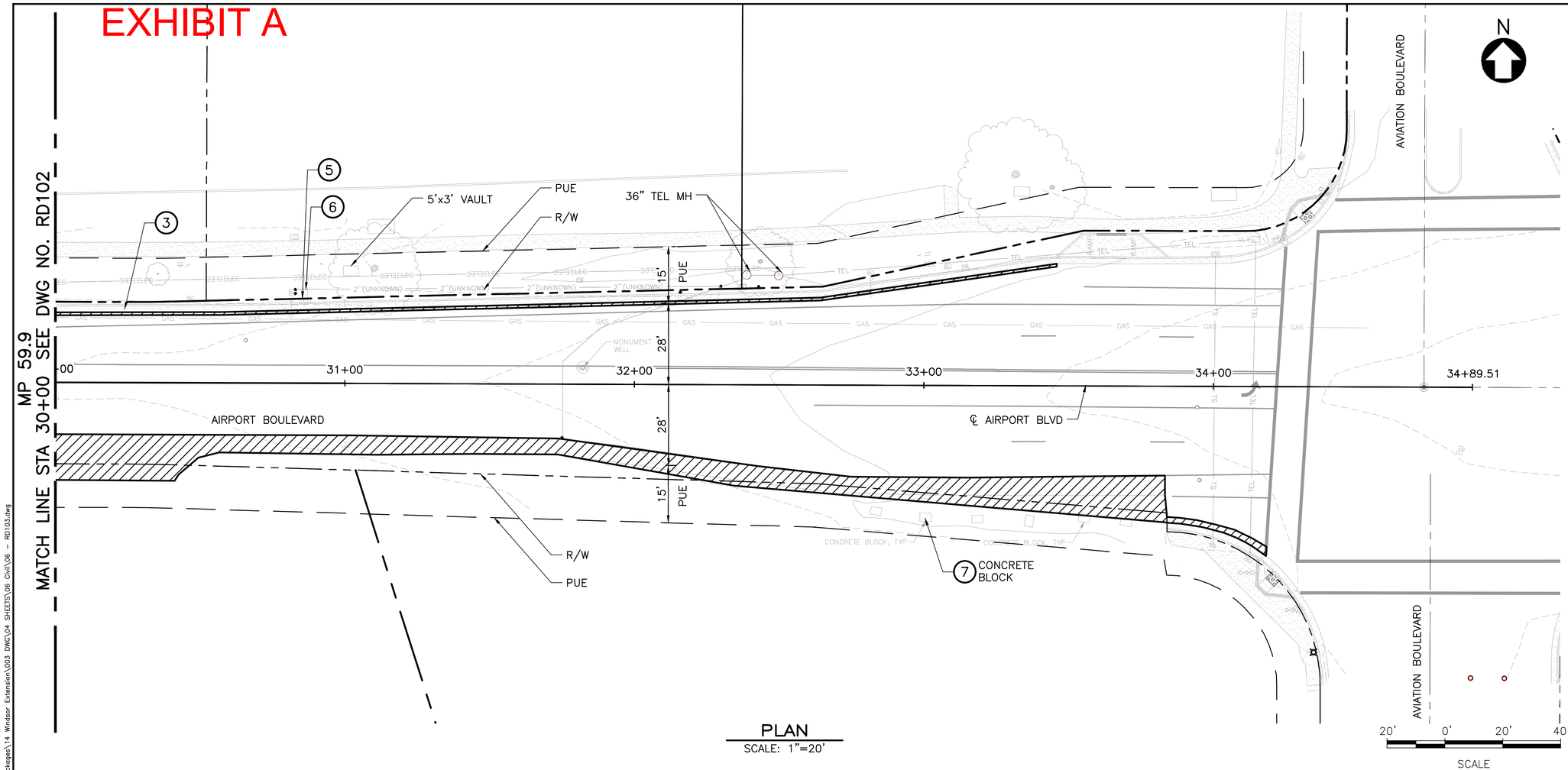

PLAN
SCALE: 1"=20'

CONSTRUCTION NOTES:

1. PROTECT
2. REMOVE CONCRETE SIDEWALK
3. REMOVE CONCRETE CURB OR CURB AND GUTTER OR AC CURB
4. REMOVE CHAIN LINK OR WOOD FENCE OR RAILING
5. REMOVE EXISTING CATCH BASIN
6. REMOVE DRAINAGE PIPE
7. SALVAGE (ITEM AS NOTED)

SAW CUT AND REMOVE FULL DEPTH PAVEMENT

REV	DATE	BY	SUB	APR	DESCRIPTION

Stacy and Witbeck, Inc.
STV 100 Years

NOT FOR CONSTRUCTION

PREPARED BY M. CAPUNO
DRAWN BY Z. OHN
CHECKED BY K. TAYLOR
IN CHARGE A. SOKOL
DATE MAR 18, 2020

DESIGN PACKAGE 2
50% SUBMITTAL

MARCH 18, 2020

SONOMA-MARIN SMART AREA RAIL TRANSIT

WINDSOR EXTENSION
ROAD IMPROVEMENTS
DEMOLITION PLAN 3 OF 3
AIRPORT BOULEVARD

SHEET 21 OF 44

CADD FILENAME 06 – RD103.dwg
SCALE 1"= 20'
CONTRACT NO. CV-DB-18-001
DWG. NO. RD103
MILEPOST 59.9

CapunoMJ Mar 27, 2020 – 11:43am I:\Projects\4020430\4020430_0001\90_CAD Models and Sheets\05 Construction Packages\14 Windsor Extension\003 DWG\04 SHEETS\06 Civil\06 – RD103.dwg

EXHIBIT A

NOTE:
1. EXISTING DRAIN INLETS THAT ARE NOT AT THE PROPOSED CURB LINE SHALL BE REMOVED IN THEIR ENTIRETY.
2. TRIM TREES AS REQUIRED TO PROVIDE ADEQUATE CLEARANCE OVERHEAD AND SIDE CLEARANCE AT CURB.

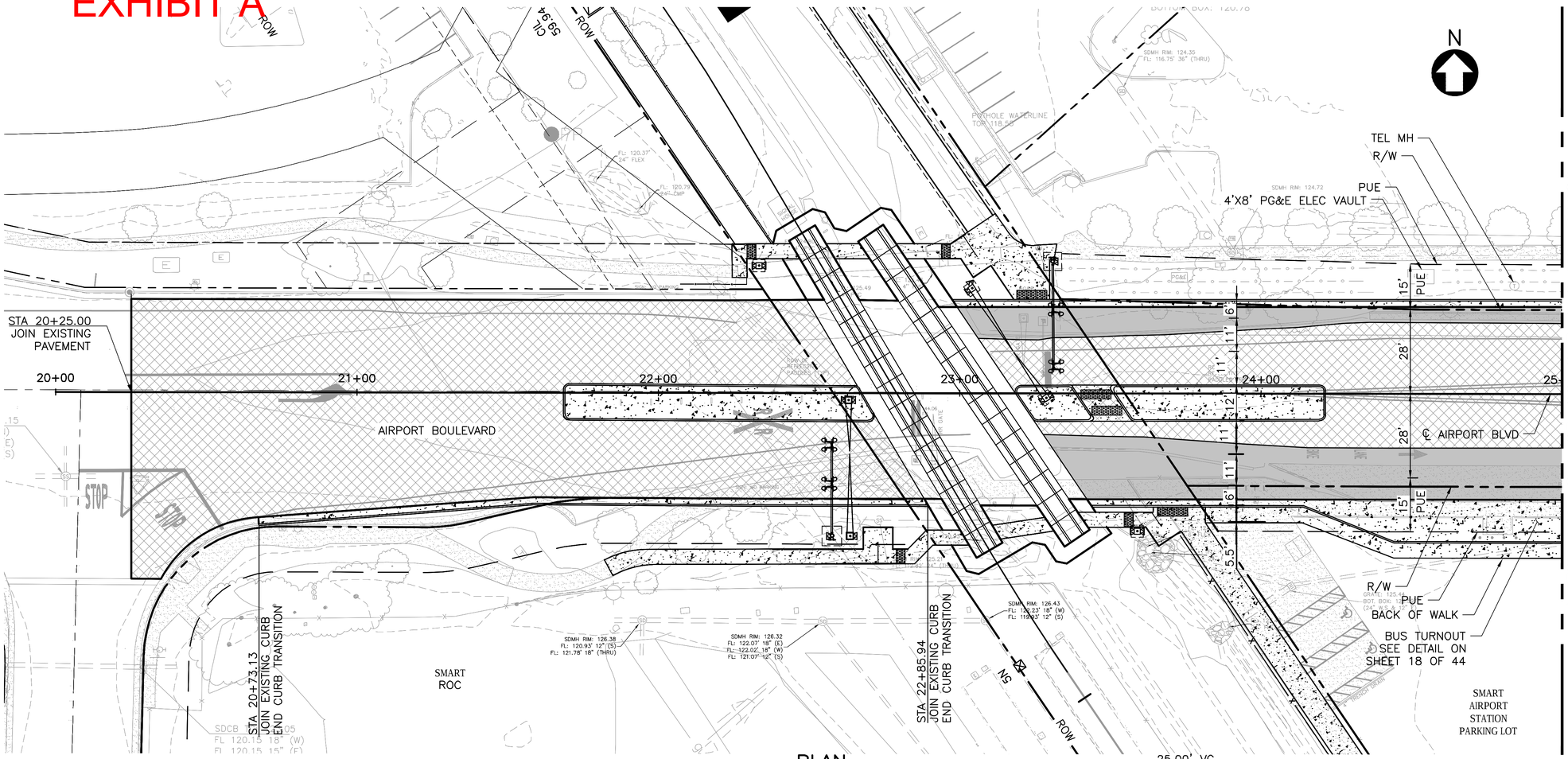

PLAN
SCALE: 1"=20'

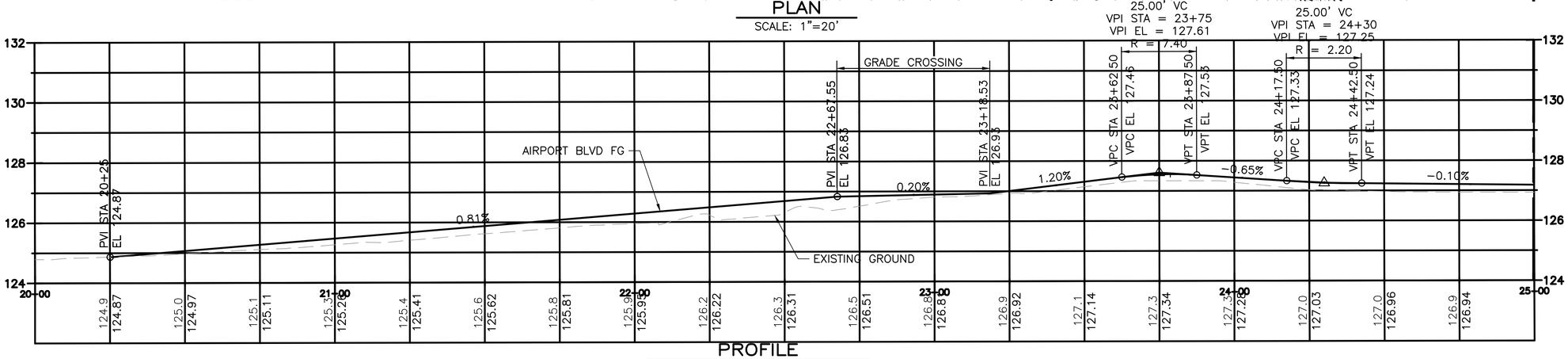

PROFILE
SCALE: 1"=20' HORIZ, 1"=5' VERT

REV	DATE	BY	SUB	APR	DESCRIPTION

Stacy and Witbeck, Inc.
STV 100 Years

NOT FOR CONSTRUCTION

PREPARED BY M. CAPUNO
DRAWN BY M. CAPUNO
CHECKED BY K. TAYLOR
IN CHARGE A. SOKOL
DATE MAR 18, 2020

DESIGN PACKAGE 2
50% SUBMITTAL

MARCH 18, 2020

SONOMA-MARIN SMART AREA RAIL TRANSIT

WINDSOR EXTENSION
ROAD IMPROVEMENTS
PLAN & PROFILE 1 OF 3
AIRPORT BOULEVARD

SHEET 22 OF 44

CADD FILENAME 07 – RD201.dwg
SCALE 1"= 20'
CONTRACT NO. CV-DB-18-001
DWG. NO. RD201
MILEPOST 59.9

CapunoMJ Mar 30, 2020 – 2:21pm I:\Projects\4020430\4020430_0001\90_CAD Models and Sheets\05 Construction Packages\14 Windsor Extension\003 DWG\04 SHEETS\06 Civil\07 – RD201.dwg

EXHIBIT A

NOTE:
1. EXISTING DRAIN INLETS THAT ARE NOT AT THE PROPOSED CURB LINE SHALL BE REMOVED IN THEIR ENTIRETY.
2. TRIM TREES AS REQUIRED TO PROVIDE ADEQUATE CLEARANCE OVERHEAD AND SIDE CLEARANCE AT CURB.

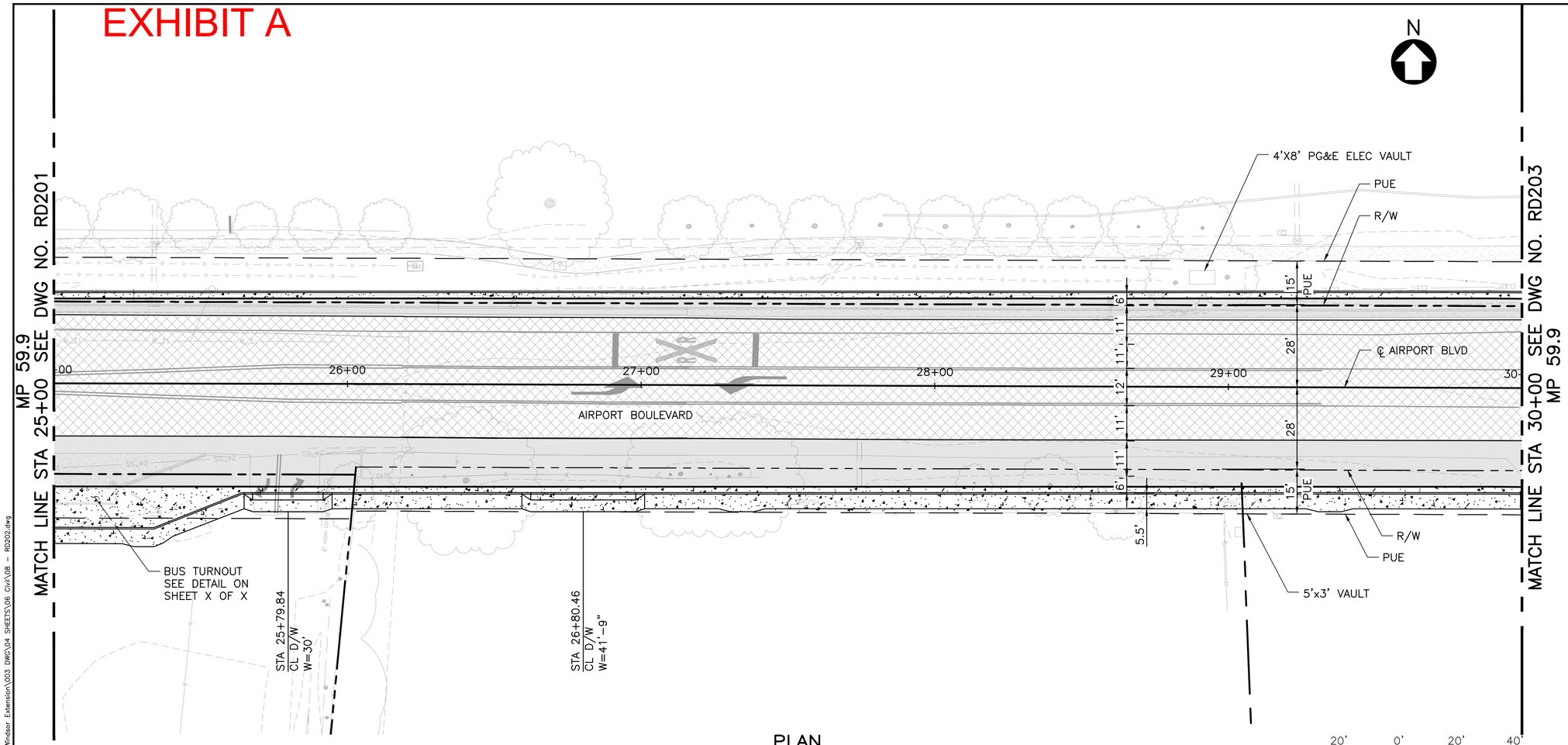

PLAN
SCALE: 1"=20'

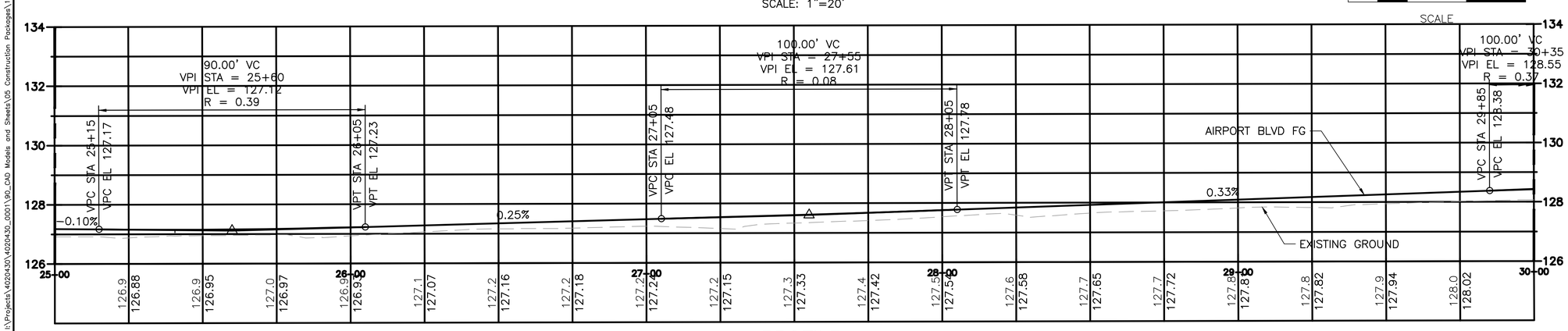

PROFILE
SCALE: 1"=20' HORIZ, 1"=5' VERT

3" OVERLAY

FULL DEPTH PAVEMENT SECTION

REV	DATE	BY	SUB	APR	DESCRIPTION

Stacy and Witbeck, Inc.
STV 100 Years

NOT FOR CONSTRUCTION

PREPARED BY M. CAPUNO
DRAWN BY Z. OHN
CHECKED BY K. TAYLOR
IN CHARGE A. SOKOL
DATE MAR 18, 2020

DESIGN PACKAGE 2
50% SUBMITTAL

MARCH 18, 2020

SONOMA-MARIN SMART AREA RAIL TRANSIT

WINDSOR EXTENSION
ROAD IMPROVEMENTS
PLAN & PROFILE 2 OF 3
AIRPORT BOULEVARD

SHEET 23 OF 44

CADD FILENAME 08 – RD202.dwg
SCALE 1"= 20'
CONTRACT NO. CV-DB-18-001
DWG. NO. RD202
MILEPOST 59.9

CapuncMJ Mar 30, 2020 – 2:23pm I:\Projects\4020430\4020430_0001\90_CAD Models and Sheets\05 Construction Packages\14 Windsor Extension\003 DWG\04 SHEETS\06 Civil\08 – RD202.dwg

EXHIBIT A

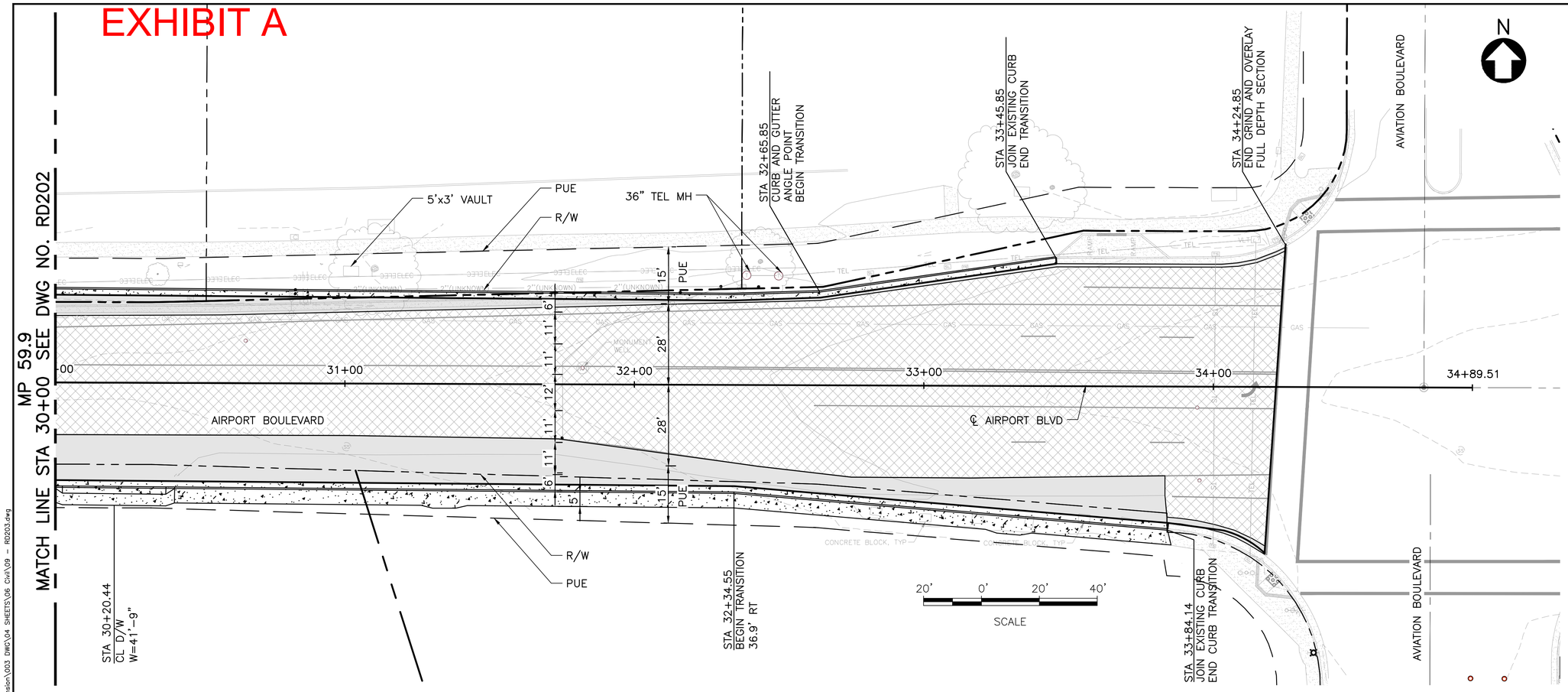

NOTE:
1. EXISTING DRAIN INLETS THAT ARE NOT AT THE PROPOSED CURB LINE SHALL BE REMOVED IN THEIR ENTIRETY.
2. TRIM TREES AS REQUIRED TO PROVIDE ADEQUATE CLEARANCE OVERHEAD AND SIDE CLEARANCE AT CURB.

3" OVERLAY

FULL DEPTH PAVEMENT SECTION

PLAN

SCALE: 1"=20'

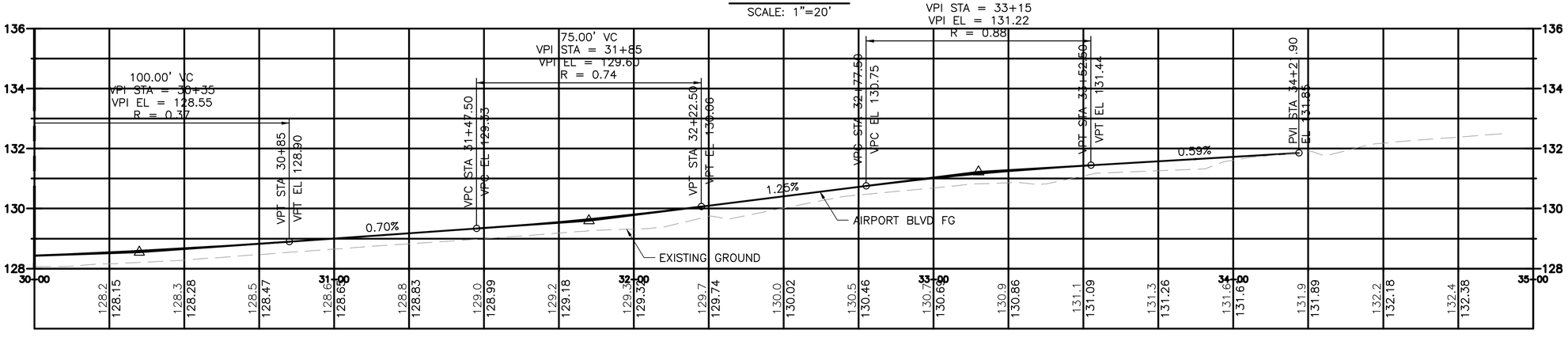

PROFILE

SCALE: 1"=20' HORIZ, 1"=5' VERT

REV	DATE	BY	SUB	APR	DESCRIPTION

Stacy and Witbeck, Inc.

STV 100 Years

NOT FOR CONSTRUCTION

PREPARED BY M. CAPUNO
DRAWN BY Z. OHN
CHECKED BY K. TAYLOR
IN CHARGE A. SOKOL
DATE MAR 18, 2020

DESIGN PACKAGE 2
50% SUBMITTAL

MARCH 18, 2020

SONOMA-MARIN SMART AREA RAIL TRANSIT

WINDSOR EXTENSION

ROAD IMPROVEMENTS
PLAN & PROFILE 3 OF 3
AIRPORT BOULEVARD

SHEET 24 OF 44

CADD FILENAME 09 – RD203.dwg
SCALE 1"= 20'
CONTRACT NO. CV-DB-18-001
DWG. NO. RD203
MILEPOST 59.9

EXHIBIT A

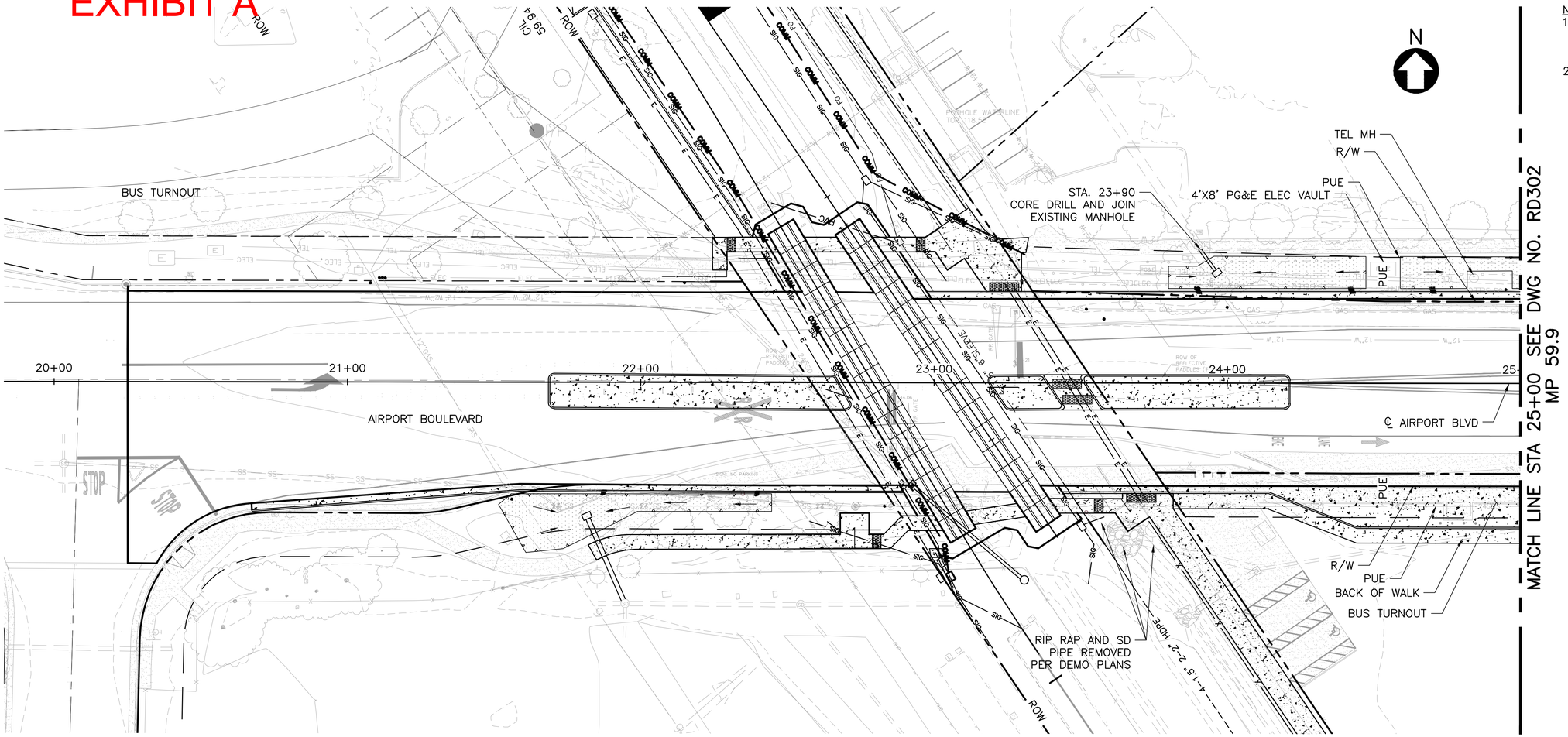

PLAN
SCALE: 1"=20'

20' 0' 20' 40'
SCALE

NOTE:
1. EXISTING DRAIN INLETS THAT ARE NOT AT THE PROPOSED CURB LINE SHALL BE REMOVED IN THEIR ENTIRETY.
2. TRIM TREES AS REQUIRED TO PROVIDE ADEQUATE CLEARANCE OVERHEAD AND SIDE CLEARANCE AT CURB.

REV	DATE	BY	SUB	APR	DESCRIPTION

Stacy and Witbeck, Inc.
STV 100 Years

NOT FOR CONSTRUCTION

PREPARED BY M. CAPUNO
DRAWN BY Z. OHN
CHECKED BY K. TAYLOR
IN CHARGE A. SOKOL
DATE MAR 18, 2020

DESIGN PACKAGE 2
50% SUBMITTAL

MARCH 18, 2020

SONOMA-MARIN SMART AREA RAIL TRANSIT

WINDSOR EXTENSION
ROAD IMPROVEMENTS
GRADING AND DRAINAGE PLAN 1 OF 3
AIRPORT BOULEVARD

SHEET 25 OF 44

CADD FILENAME 10 – RD301.dwg
SCALE 1"= 20'
CONTRACT NO. CV-DB-18-001
DWG. NO. RD301
MILEPOST 59.9

CapunoMJ Mar 30, 2020 – 2:27pm I:\Projects\4020430\4020430_0001\90_CAD Models and Sheets\05 Construction Packages\14 Windsor Extension\003 DWG\04 SHEETS\06 Civil\10 – RD301.dwg

EXHIBIT A

NOTE:
1. EXISTING DRAIN INLETS THAT ARE NOT AT THE PROPOSED CURB LINE SHALL BE REMOVED IN THEIR ENTIRETY.
2. TRIM TREES AS REQUIRED TO PROVIDE ADEQUATE CLEARANCE OVERHEAD AND SIDE CLEARANCE AT CURB.

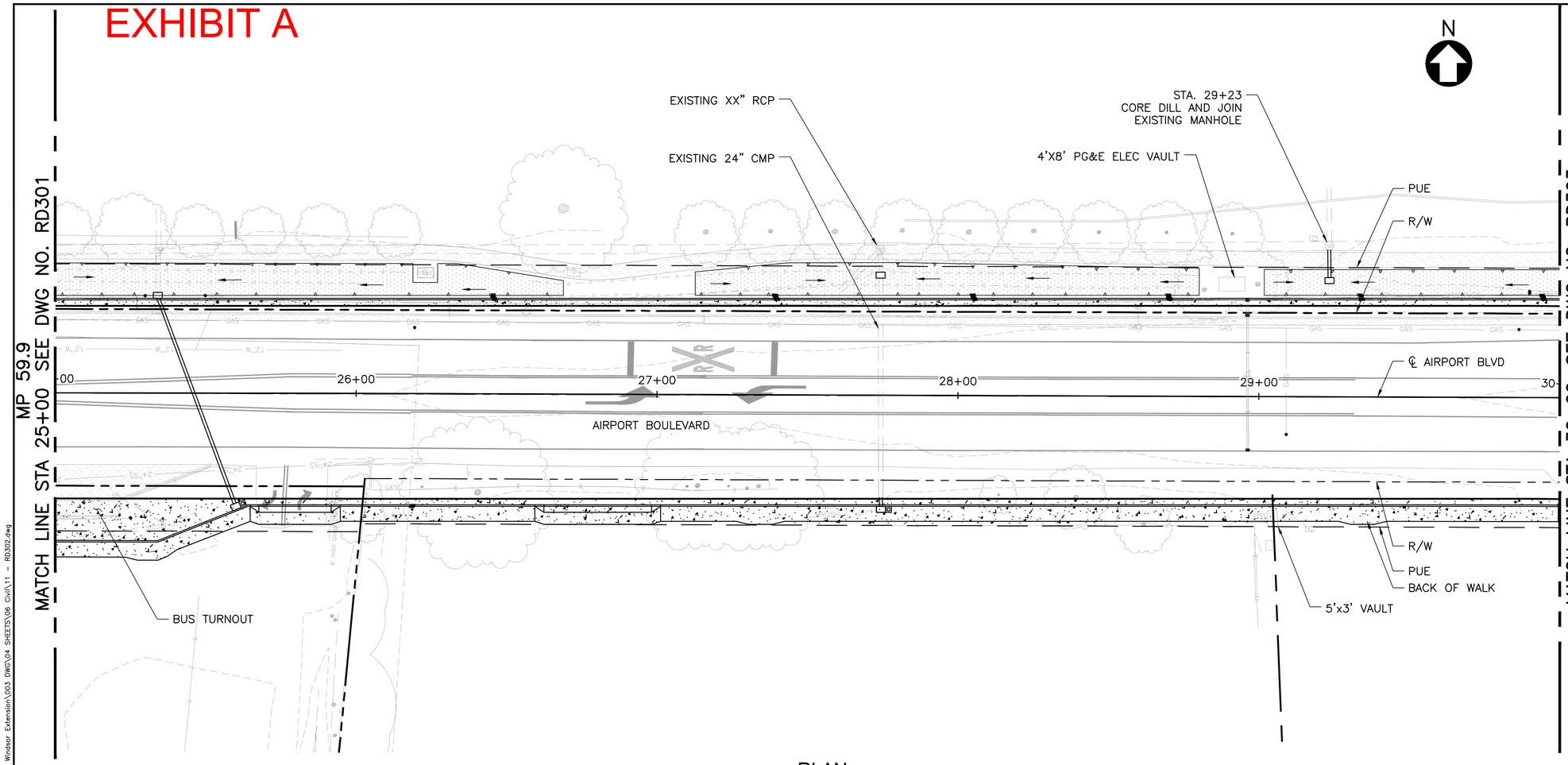

PLAN
SCALE: 1"=20'

20' 0' 20' 40'
SCALE

REV	DATE	BY	SUB	APR	DESCRIPTION

Stacy and Witbeck, Inc.
STV 100 Years

NOT FOR CONSTRUCTION

PREPARED BY M. CAPUNO
DRAWN BY M. CAPUNO
CHECKED BY K. TAYLOR
IN CHARGE A. SOKOL
DATE MAR 18, 2020

DESIGN PACKAGE 2
50% SUBMITTAL

MARCH 18, 2020

SONOMA-MARIN SMART AREA RAIL TRANSIT

WINDSOR EXTENSION
ROAD IMPROVEMENTS
GRADING AND DRAINAGE PLAN 2 OF 3
AIRPORT BOULEVARD

SHEET 26 OF 44

CADD FILENAME 11 – RD302.dwg
SCALE 1"= 20'
CONTRACT NO. CV-DB-18-001
DWG. NO. RD302
MILEPOST 59.9

CapunoMJ Mar 27, 2020 – 11:49am I:\Projects\4020430\4020430_0001\90_CAD Models and Sheets\05 Construction Packages\14 Windsor Extension\003 DWG\04 SHEETS\06 Civil\11 – RD302.dwg

EXHIBIT A

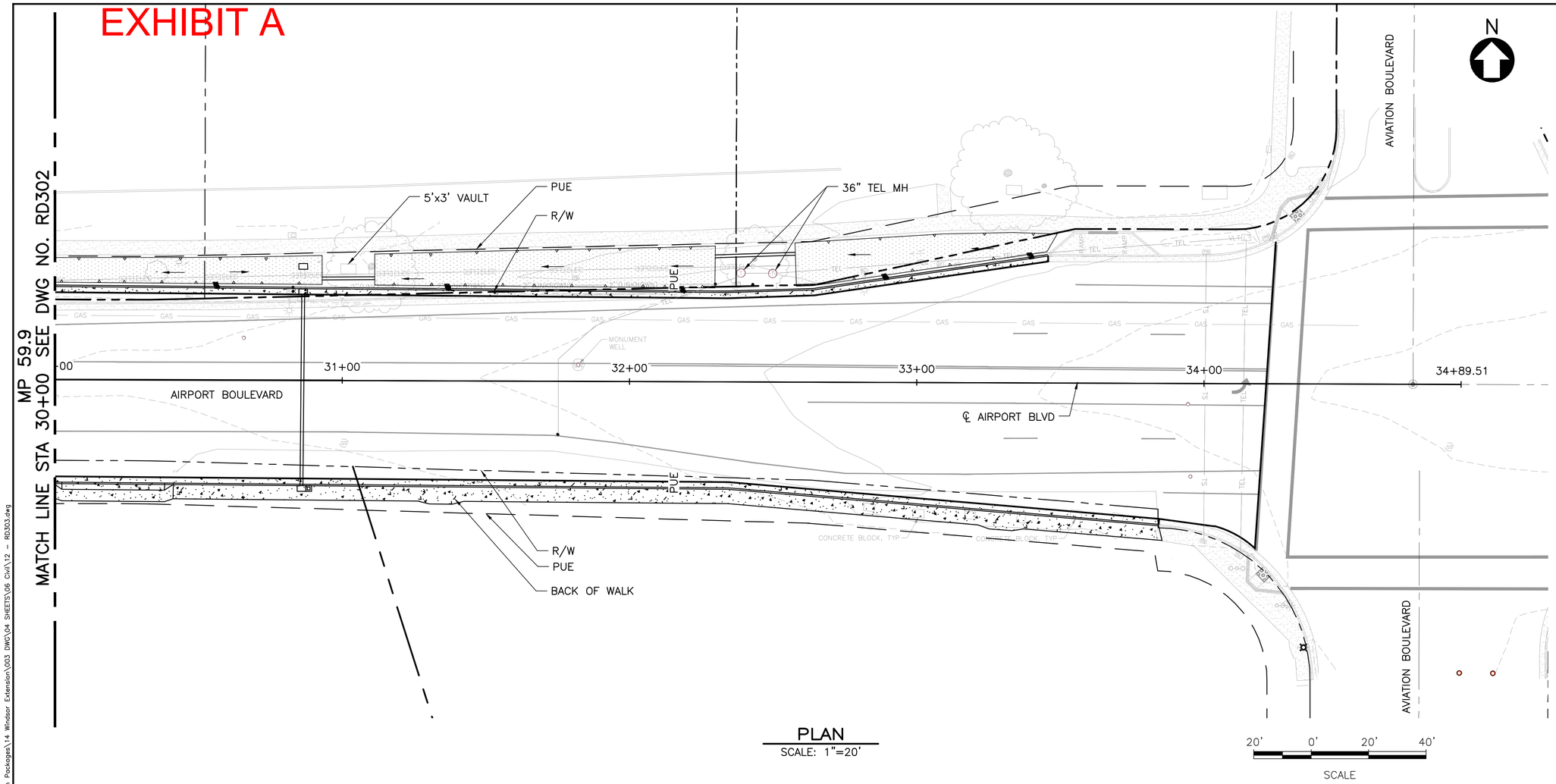

PLAN
SCALE: 1"=20'

NOTE:
1. EXISTING DRAIN INLETS THAT ARE NOT AT THE PROPOSED CURB LINE SHALL BE REMOVED IN THEIR ENTIRETY.
2. TRIM TREES AS REQUIRED TO PROVIDE ADEQUATE CLEARANCE OVERHEAD AND SIDE CLEARANCE AT CURB.

REV	DATE	BY	SUB	APR	DESCRIPTION

Stacy and Witbeck, Inc.
STV 100 Years

NOT FOR CONSTRUCTION

PREPARED BY M. CAPUNO
DRAWN BY M. CAPUNO
CHECKED BY K. TAYLOR
IN CHARGE A. SOKOL
DATE MAR 18, 2020

DESIGN PACKAGE 2
50% SUBMITTAL

MARCH 18, 2020

SONOMA-MARIN SMART AREA RAIL TRANSIT

WINDSOR EXTENSION
ROAD IMPROVEMENTS
GRADING AND DRAINAGE PLAN 3 OF 3
AIRPORT BOULEVARD

SHEET 27 OF 44

CADD FILENAME 12 – RD303.dwg
SCALE 1"= 20'
CONTRACT NO. CV-DB-18-001
DWG. NO. RD303
MILEPOST 59.9

CapunoMJ Mar 30, 2020 – 2:31pm i:\Projects\4020430\4020430_0001\90_CAD Models and Sheets\05 Construction Packages\14 Windsor Extension\003 DWG\04 SHEETS\06 Civil\12 – RD303.dwg

EXHIBIT A

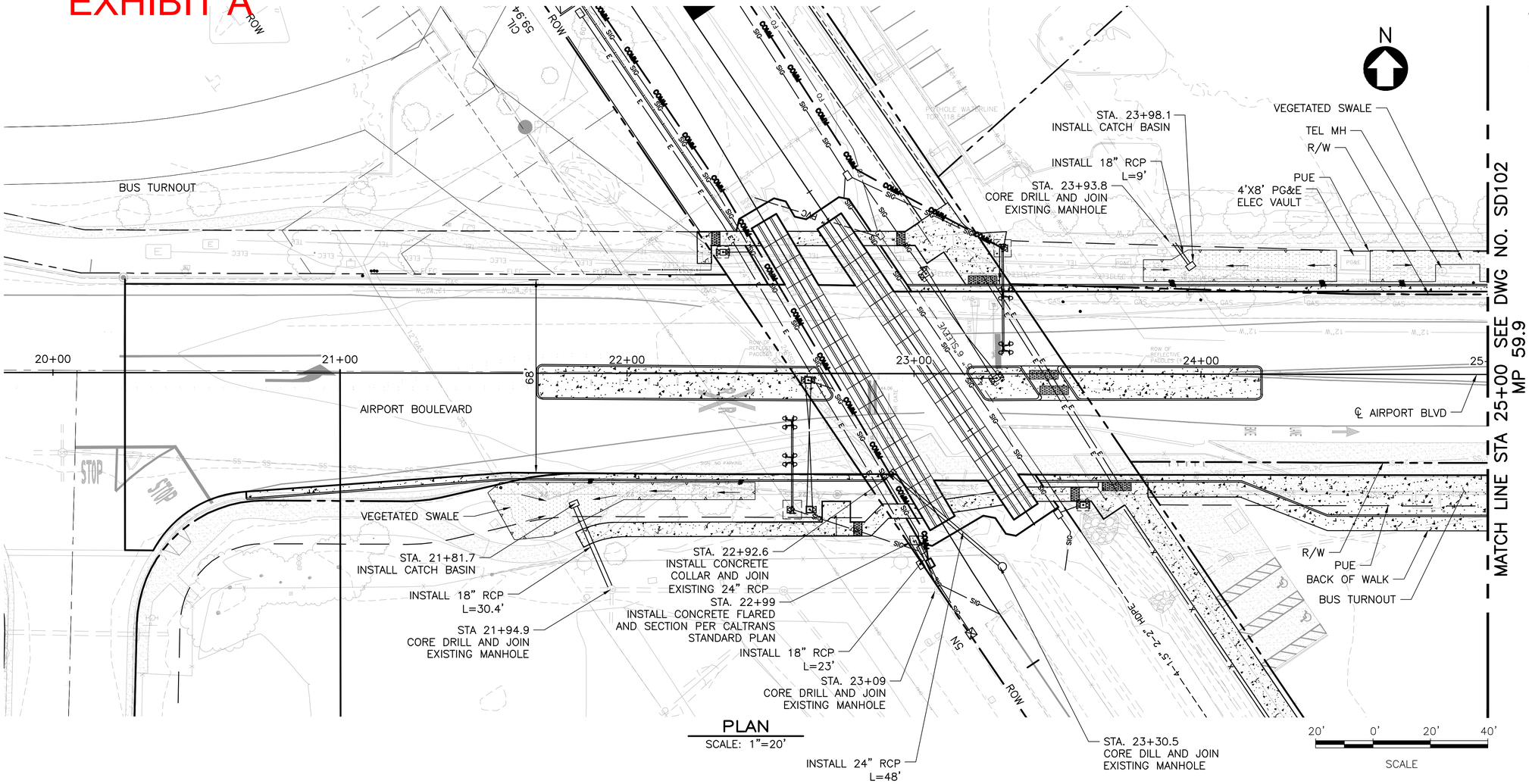

PLAN
SCALE: 1"=20'

NOTE:
1. EXISTING DRAIN INLETS THAT ARE NOT AT THE PROPOSED CURB LINE SHALL BE REMOVED IN THEIR ENTIRETY.
2. TRIM TREES AS REQUIRED TO PROVIDE ADEQUATE CLEARANCE OVERHEAD AND SIDE CLEARANCE AT CURB.

REV	DATE	BY	SUB	APR	DESCRIPTION

Stacy and Witbeck, Inc.
STV 100 Years

NOT FOR CONSTRUCTION

PREPARED BY M. CAPUNO
DRAWN BY M. CAPUNO
CHECKED BY K. TAYLOR
IN CHARGE A. SOKOL
DATE MAR 18, 2020

DESIGN PACKAGE 2
50% SUBMITTAL

MARCH 18, 2020

SONOMA-MARIN SMART AREA RAIL TRANSIT

WINDSOR EXTENSION
ROAD IMPROVEMENTS
STORM DRAIN PLAN & PROFILE SHEET 1 OF 3
AIRPORT BOULEVARD

SHEET 28 OF 44

CADD FILENAME 13 – SD101.dwg
SCALE 1"= 20'
CONTRACT NO. CV-DB-18-001
DWG. NO. SD101
MILEPOST 59.9

CapunoMJ Mar 30, 2020 – 2:32pm I:\Projects\4020430\4020430_0001\90_CAD Models and Sheets\05 Construction Packages\14 Windsor Extension\003 DWG\04 SHEETS\06 Civil\13 – SD101.dwg

EXHIBIT A

NOTE:
1. EXISTING DRAIN INLETS THAT ARE NOT AT THE PROPOSED CURB LINE SHALL BE REMOVED IN THEIR ENTIRETY.
2. TRIM TREES AS REQUIRED TO PROVIDE ADEQUATE CLEARANCE OVERHEAD AND SIDE CLEARANCE AT CURB.

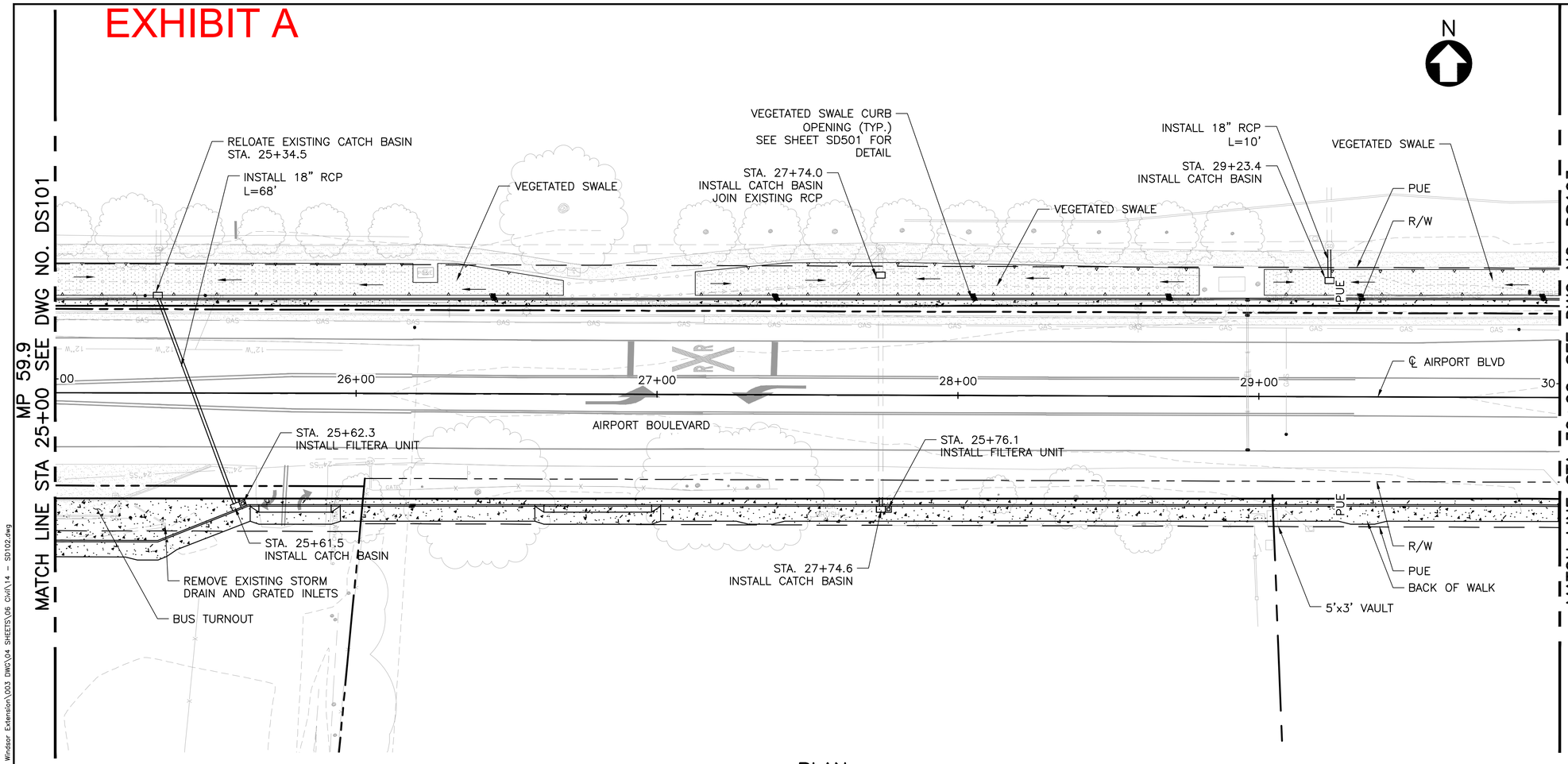

PLAN
SCALE: 1"=20'

20' 0' 20' 40'
SCALE

REV	DATE	BY	SUB	APR	DESCRIPTION

Stacy and Witbeck, Inc.
STV 100 Years

NOT FOR CONSTRUCTION

PREPARED BY M. CAPUNO
DRAWN BY M. CAPUNO
CHECKED BY K. TAYLOR
IN CHARGE A. SOKOL
DATE MAR 18, 2020

DESIGN PACKAGE 2
50% SUBMITTAL

MARCH 18, 2020

SONOMA-MARIN SMART AREA RAIL TRANSIT

WINDSOR EXTENSION
ROAD IMPROVEMENTS
STORM DRAIN PLAN & PROFILE 2 OF 3
AIRPORT BOULEVARD

SHEET 29 OF 44

CADD FILENAME 14 – SD102.dwg
SCALE 1"= 20'
CONTRACT NO. CV-DB-18-001
DWG. NO. SD102
MILEPOST 59.9

CapuinoMJ Mar 27, 2020 – 11:53am I:\Projects\4020430\4020430_0001\90_CAD Models and Sheets\05 Construction Packages\14 Windsor Extension\003 DWG\04 SHEETS\06 Civil\14 – SD102.dwg

EXHIBIT A

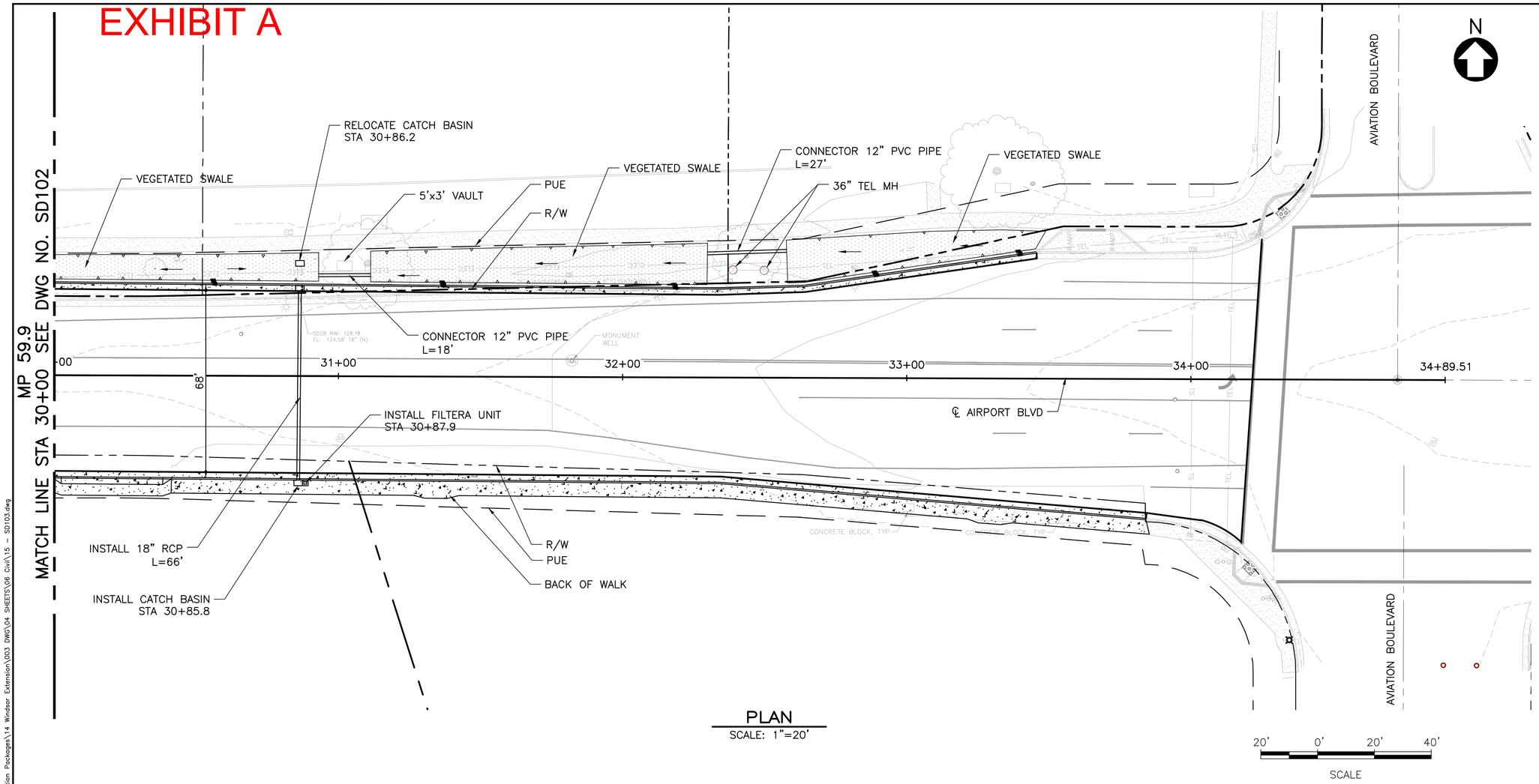

PLAN
SCALE: 1"=20'

NOTE:
1. EXISTING DRAIN INLETS THAT ARE NOT AT THE PROPOSED CURB LINE SHALL BE REMOVED IN THEIR ENTIRETY.
2. TRIM TREES AS REQUIRED TO PROVIDE ADEQUATE CLEARANCE OVERHEAD AND SIDE CLEARANCE AT CURB.

PROFILE
SCALE: 1"=20' HORIZ, 1"=5' VERT

REV	DATE	BY	SUB	APR	DESCRIPTION

Stacy and Witbeck, Inc.
STV 100 Years

NOT FOR CONSTRUCTION

PREPARED BY M. CAPUNO
DRAWN BY Z. OHN
CHECKED BY K. TAYLOR
IN CHARGE A. SOKOL
DATE MAR 18, 2020

DESIGN PACKAGE 2
50% SUBMITTAL

MARCH 18, 2020

SONOMA-MARIN SMART AREA RAIL TRANSIT

WINDSOR EXTENSION
ROAD IMPROVEMENTS
STORM DRAIN PLAN & PROFILE 3 OF 3
AIRPORT BOULEVARD

SHEET 30 OF 44

CADD FILENAME 15 – SD103.dwg
SCALE 1"= 20'
CONTRACT NO. CV-DB-18-001
DWG. NO. SD103
MILEPOST 59.9

EXHIBIT A

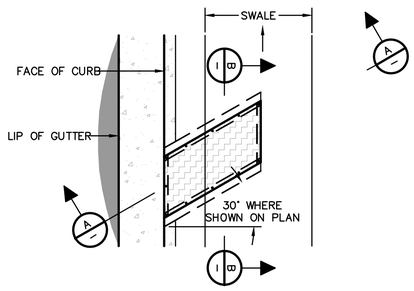

PLAN

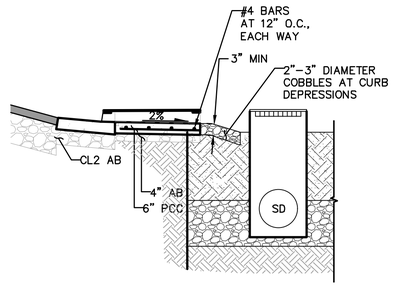

SECTION A–A

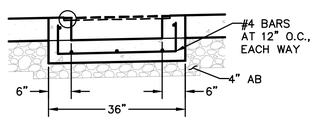

SECTION B–B

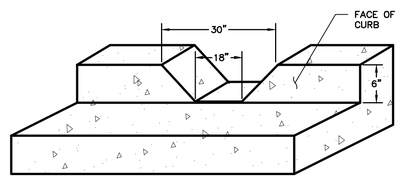

1 – VEGETATED SWALE CURB OPENNING DETAIL

NOT TO SCALE

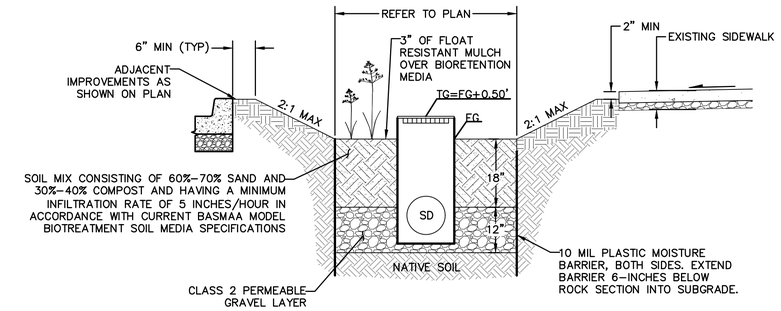

NOTE

BIORETENTION AREAS SHALL INCLUDE PERFORATED SUBDRAINS. THE TOPS OF SUBDRAINS SHALL MATCH THE TOP OF THE CLASS II PERMEABLE GRAVEL LAYER.

2 – VEGETATED SWALE TYPICAL SECTION

NOT TO SCALE

CapuinoMJ Mar 27, 2020 – 11:55am I:\Projects\4020430\4020430_0001\90_CAD Models and Sheets\05 Construction Packages\14 Windsor Extension\003 DWG\04 SHEETS\06 Civil\16 – SD501.dwg

REV	DATE	BY	SUB	APR	DESCRIPTION

Stacy and Witbeck, Inc.
STV 100 Years

NOT FOR CONSTRUCTION

PREPARED BY M. CAPUNO
DRAWN BY Z. OHN
CHECKED BY K. TAYLOR
IN CHARGE A. SOKOL
DATE MAR 18, 2020

DESIGN PACKAGE 2
50% SUBMITTAL

MARCH 18, 2020

SONOMA-MARIN SMART AREA RAIL TRANSIT

WINDSOR EXTENSION

ROAD IMPROVEMENTS
STORM DRAIN DETAIL SHEET
AIRPORT BOULEVARD

SHEET 31 OF 44

CADD FILENAME 16 – SD501.dwg
SCALE 1"= 20'
CONTRACT NO. CV–DB–18–001
DWG. NO. SD501
MILEPOST 59.9

EXHIBIT A

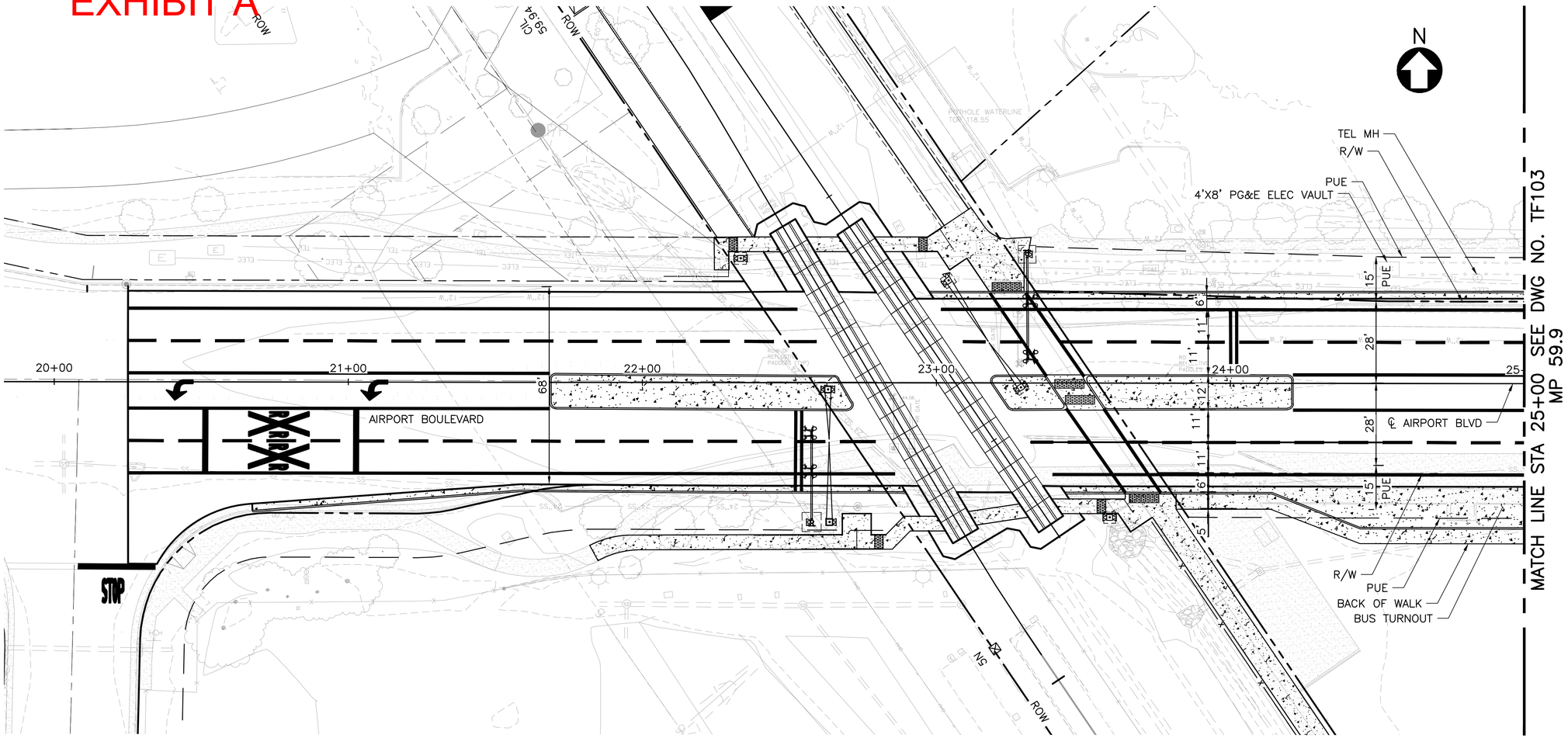

PLAN
SCALE: 1"=20'

PROFILE
SCALE: 1"=20' HORIZ, 1"=5' VERT

REV	DATE	BY	SUB	APR	DESCRIPTION

Stacy and Witbeck, Inc.
STV 100 Years

NOT FOR CONSTRUCTION

PREPARED BY M. CAPUNO
DRAWN BY M. CAPUNO
CHECKED BY K. TAYLOR
IN CHARGE A. SOKOL
DATE MAR 18, 2020

DESIGN PACKAGE 2
50% SUBMITTAL

MARCH 18, 2020

SONOMA-MARIN SMART AREA RAIL TRANSIT

WINDSOR EXTENSION

ROAD IMPROVEMENTS
SIGNING & STRIPING PLAN 1 OF 3
AIRPORT BOULEVARD

SHEET 32 OF 44

CADD FILENAME 18 – TF102.dwg
SCALE 1"= 20'
CONTRACT NO. CV-DB-18-001
DWG. NO. TF102
MILEPOST 59.9

CapunoMJ Mar 30, 2020 – 5:14pm I:\Projects\4020430\4020430_0001\90_CAD Models and Sheets\05 Construction Packages\14 Windsor Extension\003 DWG\04 SHEETS\06 Civil\18 – TF102.dwg

EXHIBIT A

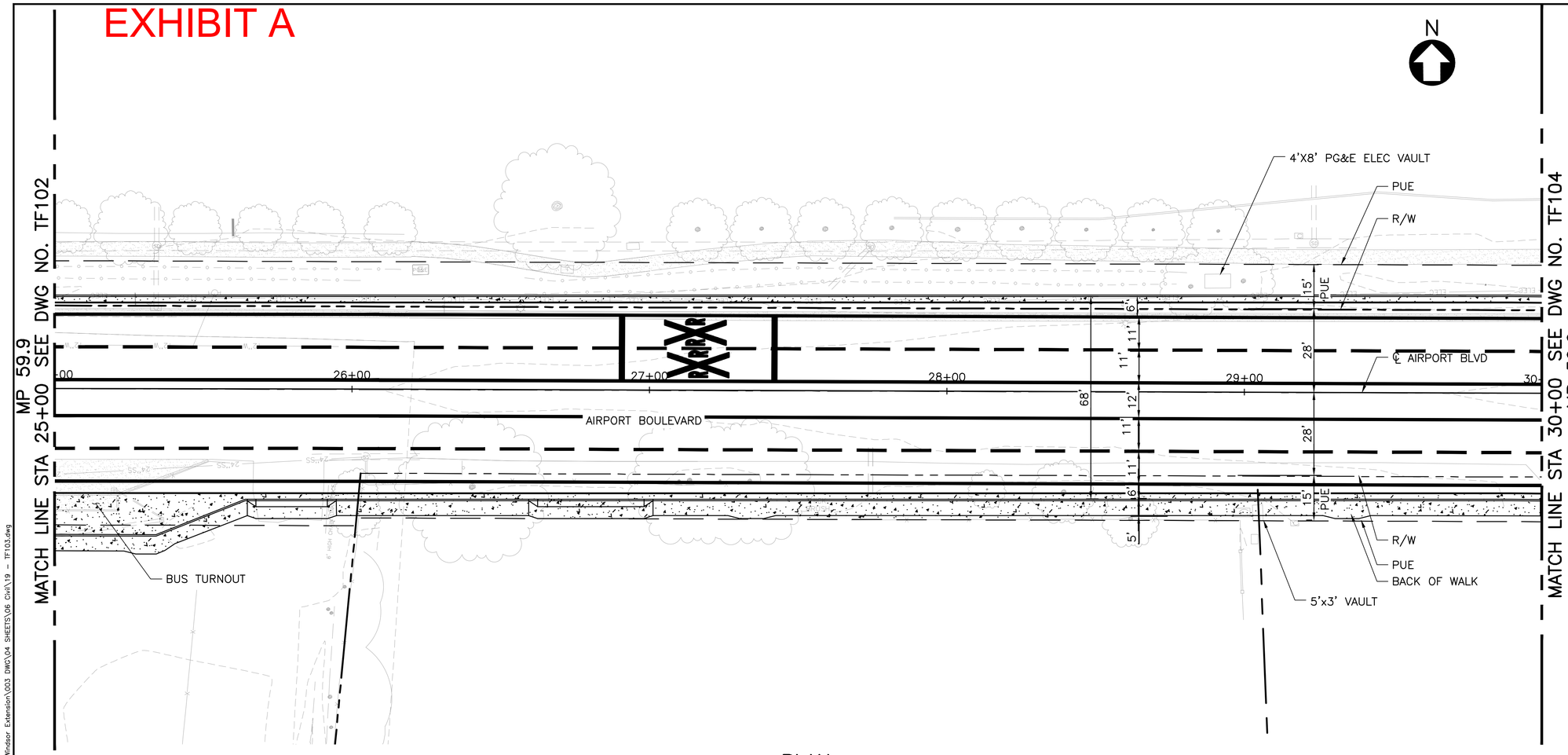

PLAN
SCALE: 1"=20'

PROFILE
SCALE: 1"=20' HORIZ, 1"=5' VERT

REV	DATE	BY	SUB	APR	DESCRIPTION

Stacy and Witbeck, Inc.
STV 100 Years

NOT FOR CONSTRUCTION

PREPARED BY M. CAPUNO
DRAWN BY Z. OHN
CHECKED BY K. TAYLOR
IN CHARGE A. SOKOL
DATE MAR 6, 2020

DESIGN PACKAGE 2
50% SUBMITTAL

MARCH 18, 2020

SONOMA-MARIN SMART AREA RAIL TRANSIT

WINDSOR EXTENSION

ROAD IMPROVEMENTS
SIGNING & STRIPING PLAN 2 OF 3
AIRPORT BOULEVARD

SHEET 33 OF 44

CADD FILENAME 19 – TF103.dwg
SCALE 1"= 20'
CONTRACT NO. CV-DB-18-001
DWG. NO. TF102
MILEPOST 59.9

CapunoMJ Mar 30, 2020 – 5:14pm I:\Projects\4020430\4020430_0001\90_CAD Models and Sheets\05 Construction Packages\14 Windsor Extension\003 DWG\04 SHEETS\06 Civil\19 – TF103.dwg

EXHIBIT A

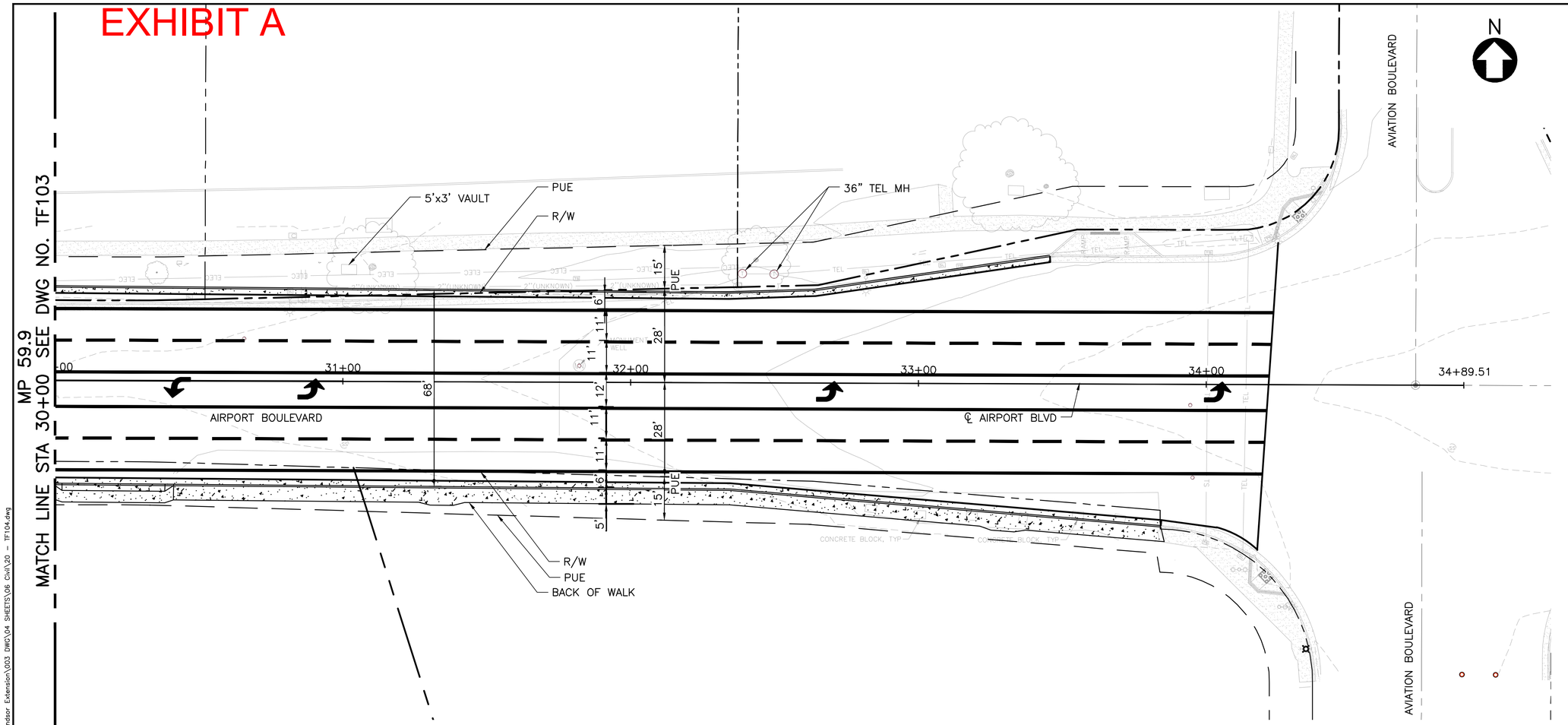

PLAN
SCALE: 1"=20'

PROFILE
SCALE: 1"=20' HORIZ, 1"=5' VERT

REV	DATE	BY	SUB	APR	DESCRIPTION

Stacy and Witbeck, Inc.
STV 100 Years

NOT FOR CONSTRUCTION

PREPARED BY M. CAPUNO
DRAWN BY Z. OHN
CHECKED BY K. TAYLOR
IN CHARGE A. SOKOL
DATE MAR 18, 2020

DESIGN PACKAGE 2
50% SUBMITTAL

MARCH 18, 2020

SONOMA-MARIN SMART AREA RAIL TRANSIT

WINDSOR EXTENSION
ROAD IMPROVEMENTS
SIGNING & STRIPING PLAN 3 OF 3
AIRPORT BOULEVARD

SHEET 34 OF 44

CADD FILENAME 20 – TF104.dwg
SCALE 1"= 20'
CONTRACT NO. CV-DB-18-001
DWG. NO. TF103
MILEPOST 59.9

CapunoMJ Mar 30, 2020 – 5:14pm I:\Projects\4020430\4020430_0001\90_CAD Models and Sheets\05 Construction Packages\14 Windsor Extension\003 DWG\04 SHEETS\06 Civil\20 – TF104.dwg

EXHIBIT A

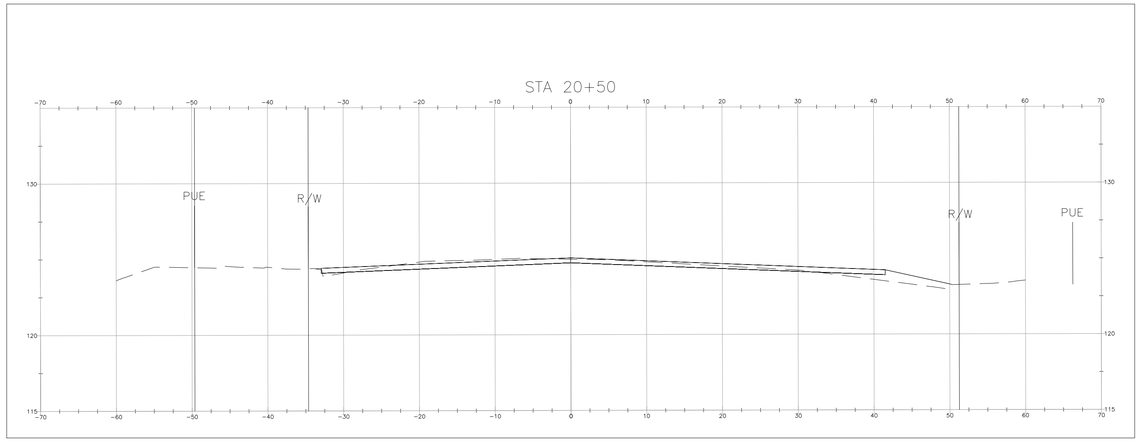

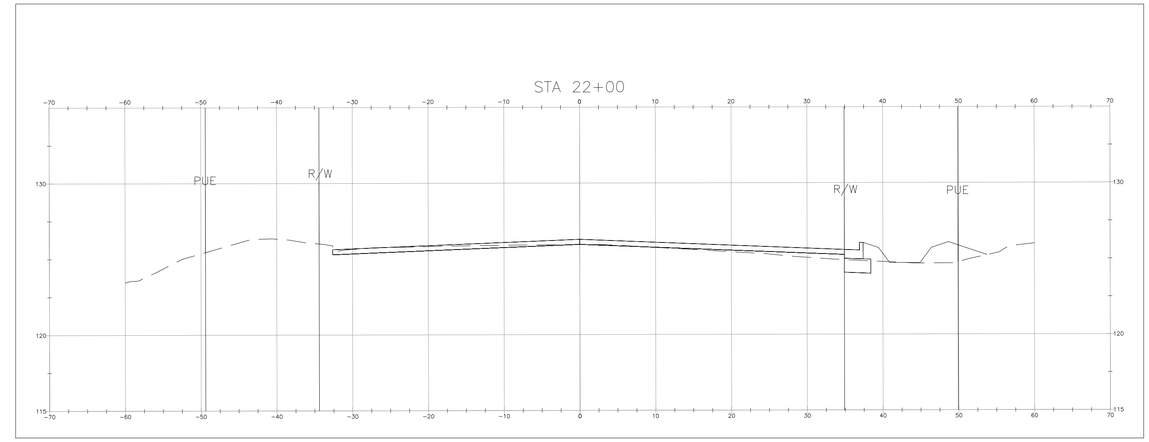

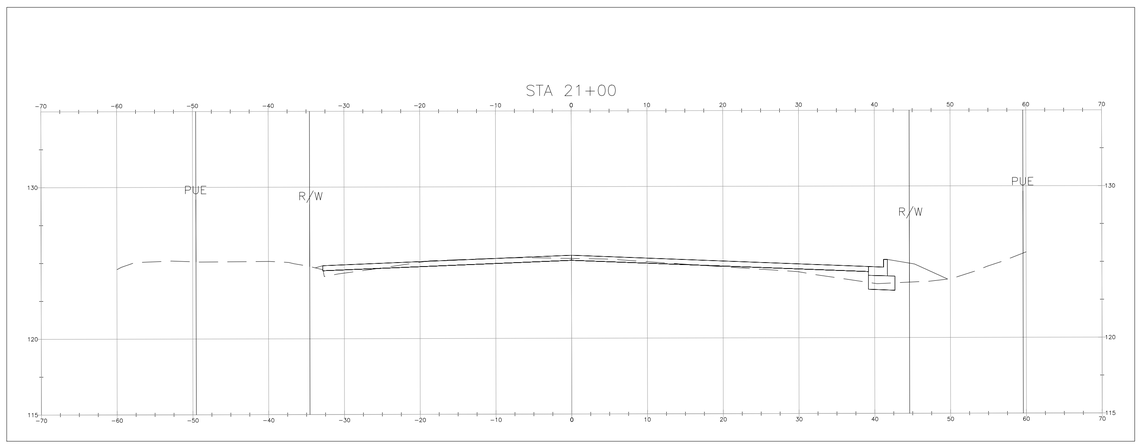

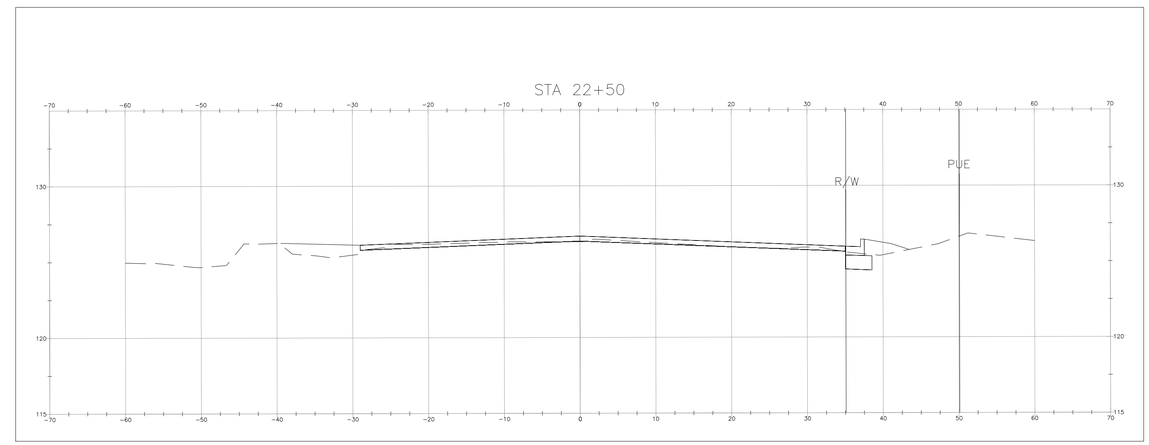

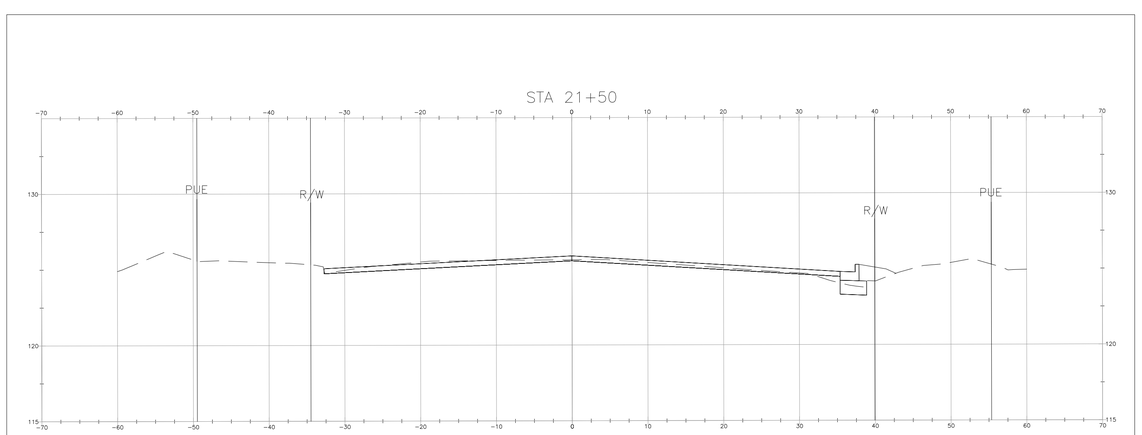

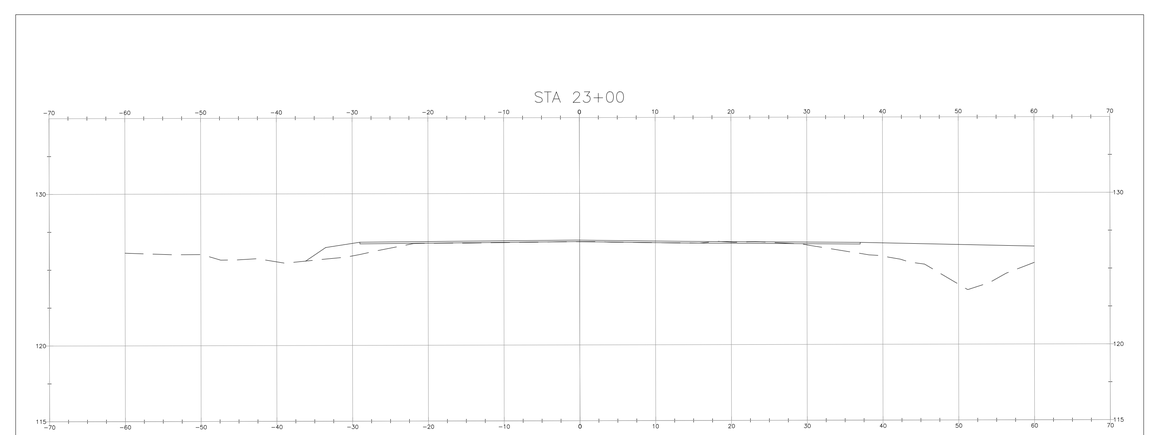

REV	DATE	BY	SUB	APR	DESCRIPTION

Stacy and Witbeck, Inc.
STV 100 Years

NOT FOR CONSTRUCTION

PREPARED BY M. CAPUNO
DRAWN BY M. CAPUNO
CHECKED BY K. TAYLOR
IN CHARGE S. SOKOL
DATE MAR 18, 2020

DESIGN PACKAGE 2
50% SUBMITTAL

MARCH 18, 2020

SONOMA-MARIN SMART AREA RAIL TRANSIT

WINDSOR EXTENSION

ROAD IMPROVEMENTS
GRADING CROSS SECTIONS
AIRPORT BOULEVARD

SHEET 35 OF 44

CADD FILENAME 22 – XS101.dwg
SCALE 1"= 20'
CONTRACT NO. CV-DB-18-001
DWG. NO. XS101
MILEPOST 59.9

CapunoMJ Mar 30, 2020 – 3:18pm I:\Projects\402043O\402043O_0001\90_CAD Models and Sheets\05 Construction Packages\14 Windsor Extension\003 DWG\04 SHEETS\06 Civil\22 – XS101.dwg

EXHIBIT A

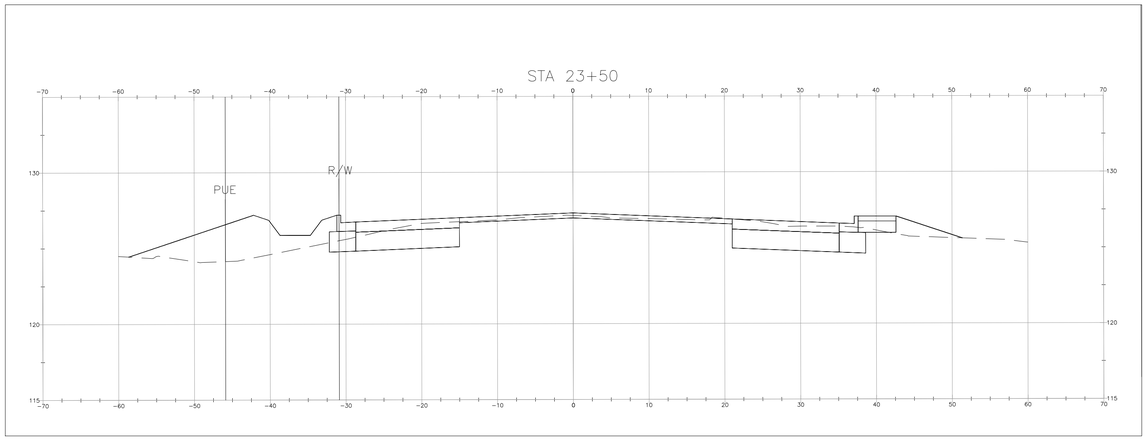

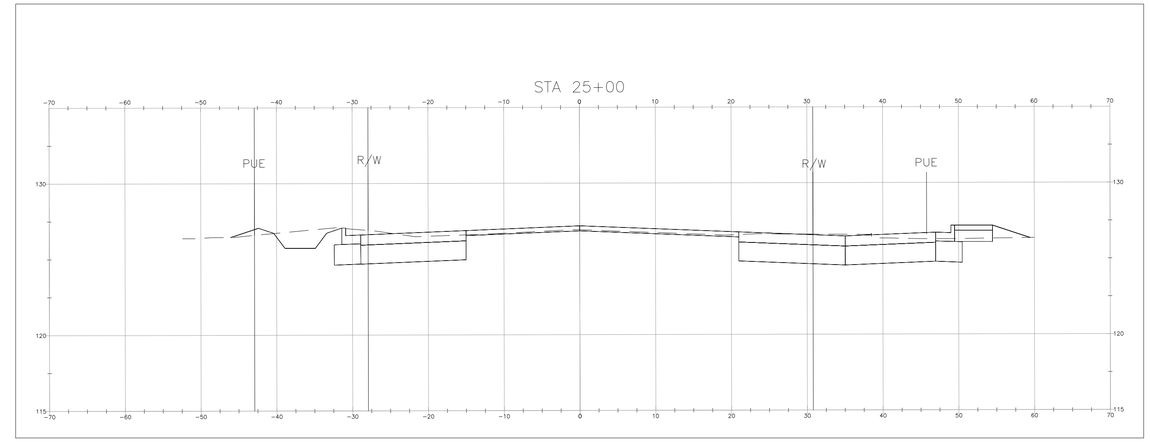

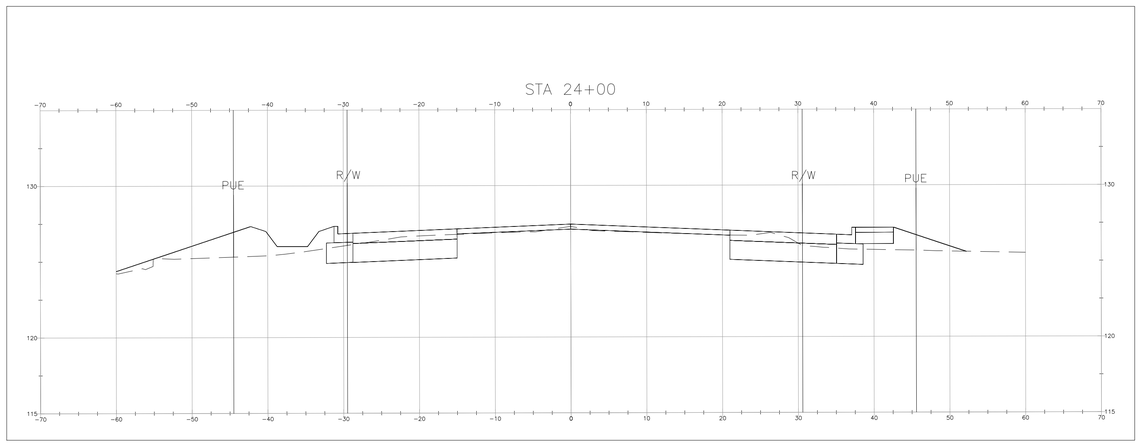

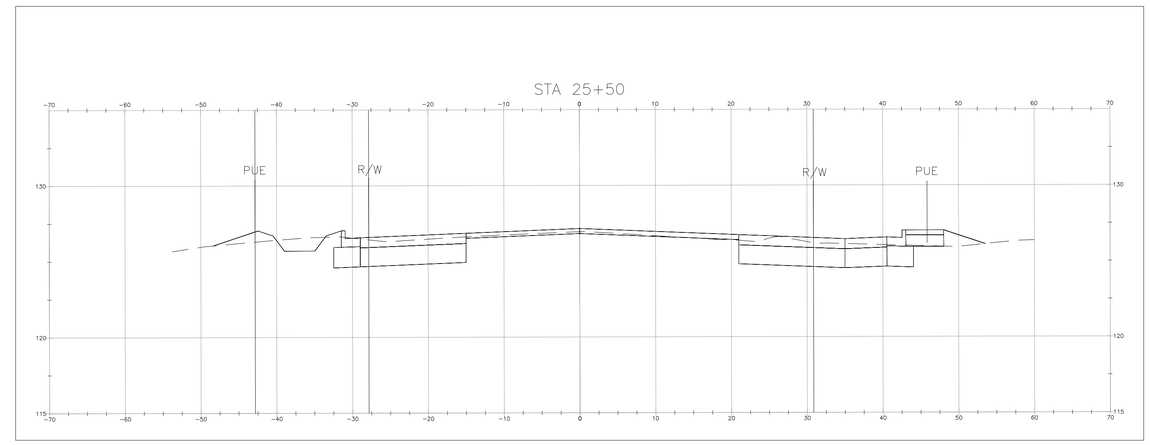

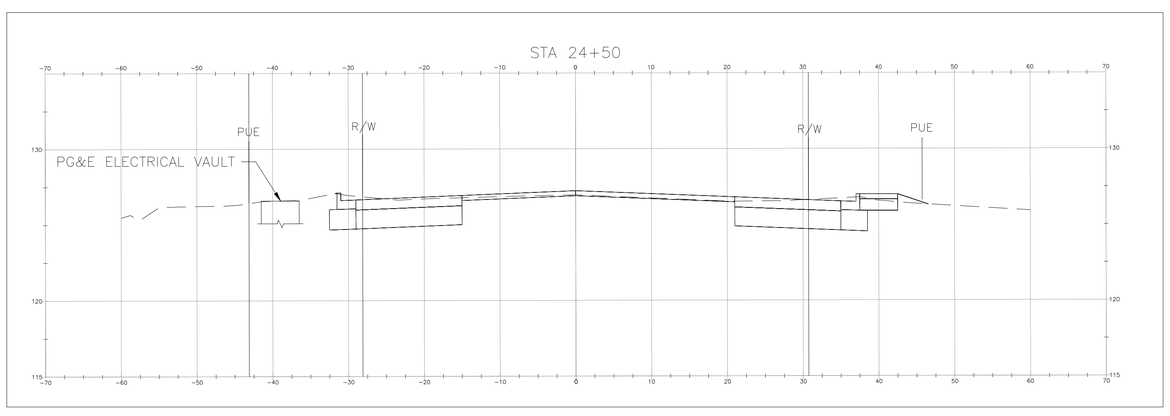

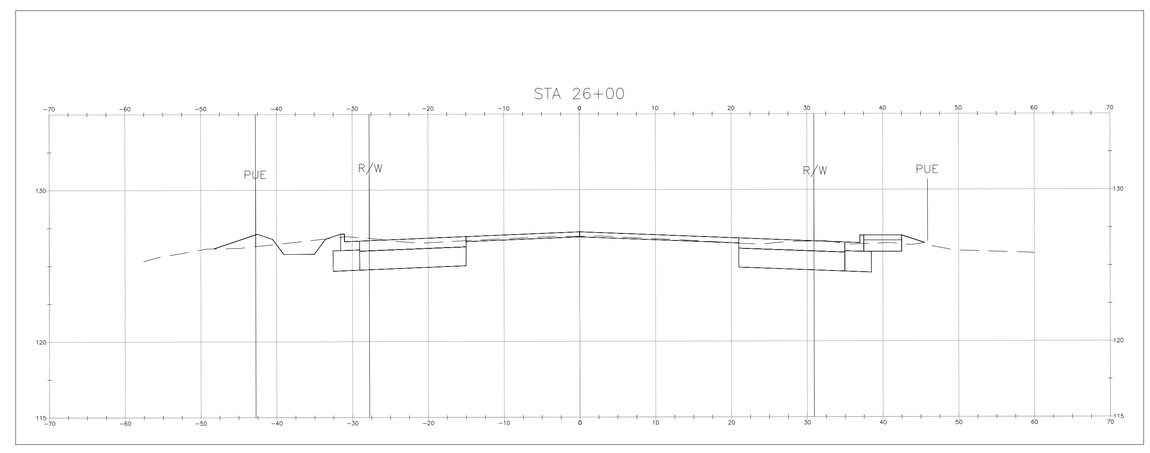

REV	DATE	BY	SUB	APR	DESCRIPTION

Stacy and Witbeck, Inc.
STV 100 Years

NOT FOR CONSTRUCTION

PREPARED BY M. CAPUNO
DRAWN BY M. CAPUNO
CHECKED BY K. TAYLOR
IN CHARGE A. SOKOL
DATE MAR 18, 2020

DESIGN PACKAGE 2
50% SUBMITTAL

MARCH 18, 2020

SONOMA-MARIN SMART AREA RAIL TRANSIT

WINDSOR EXTENSION

ROAD IMPROVEMENTS
GRADING CROSS SECTIONS
AIRPORT BOULEVARD

SHEET 36 OF 44

CADD FILENAME 23 – XS102.dwg
SCALE 1"= 10'
CONTRACT NO. CV-DB-18-001
DWG. NO. XS102
MILEPOST 59.9

EXHIBIT A

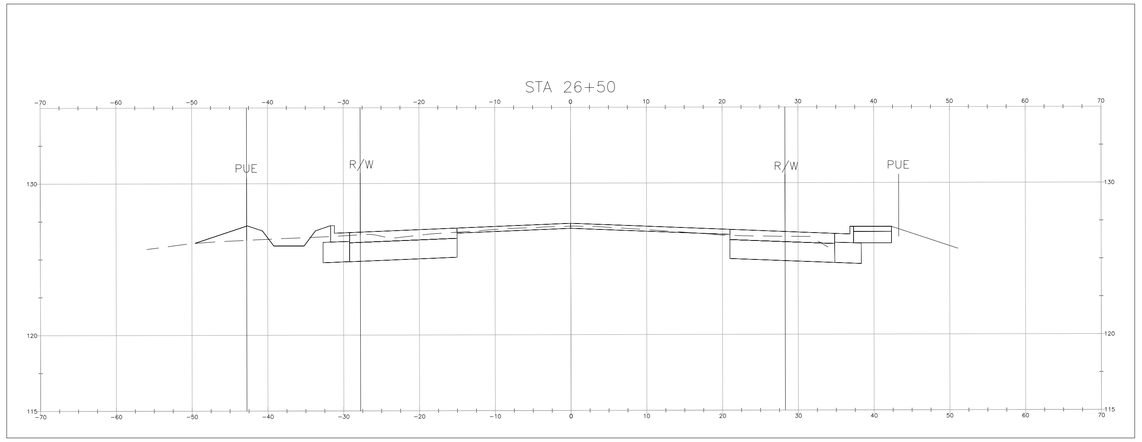

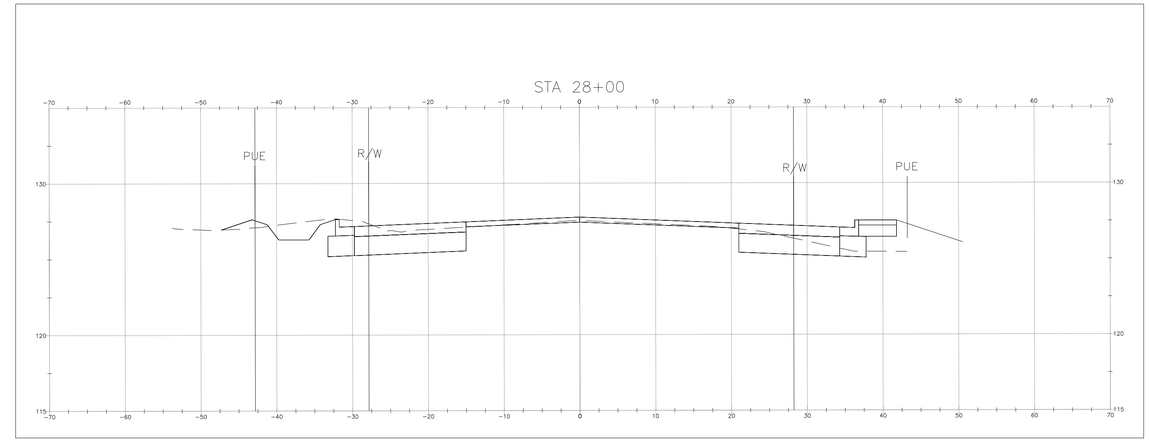

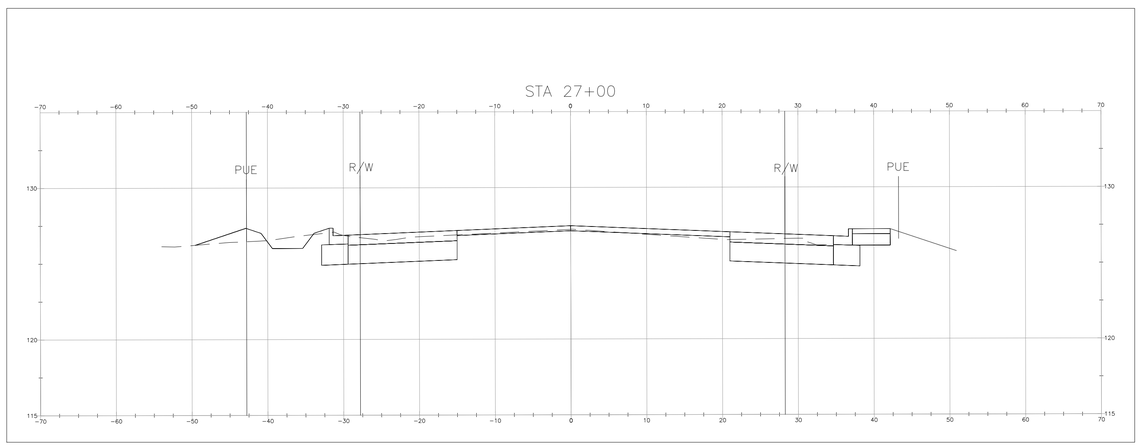

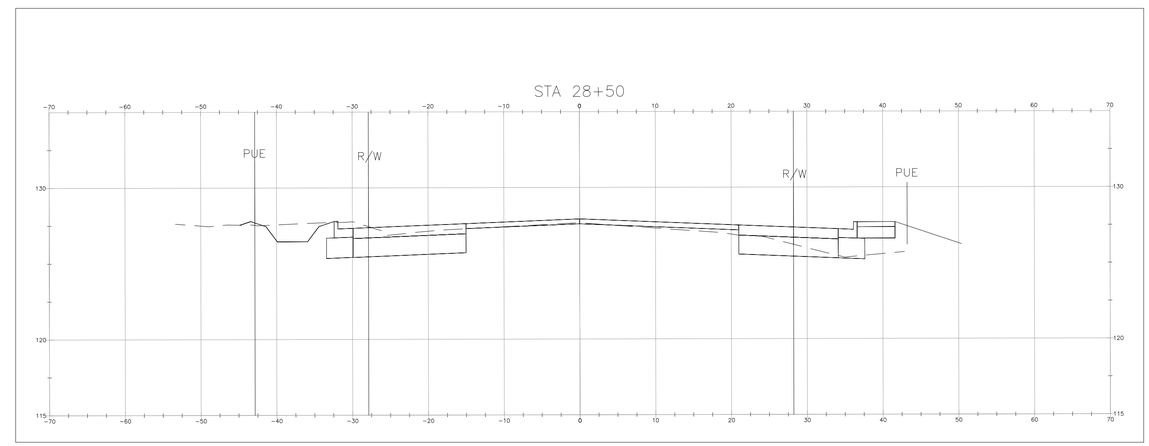

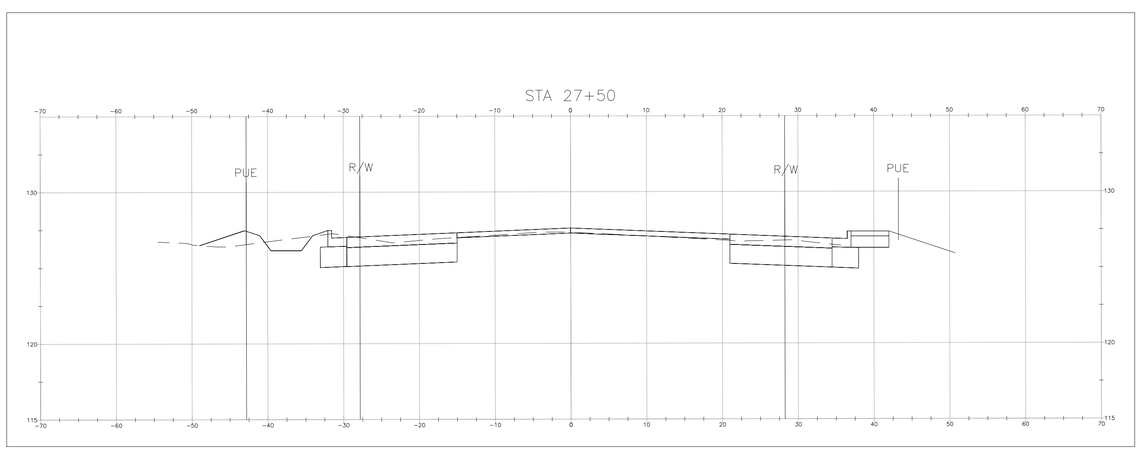

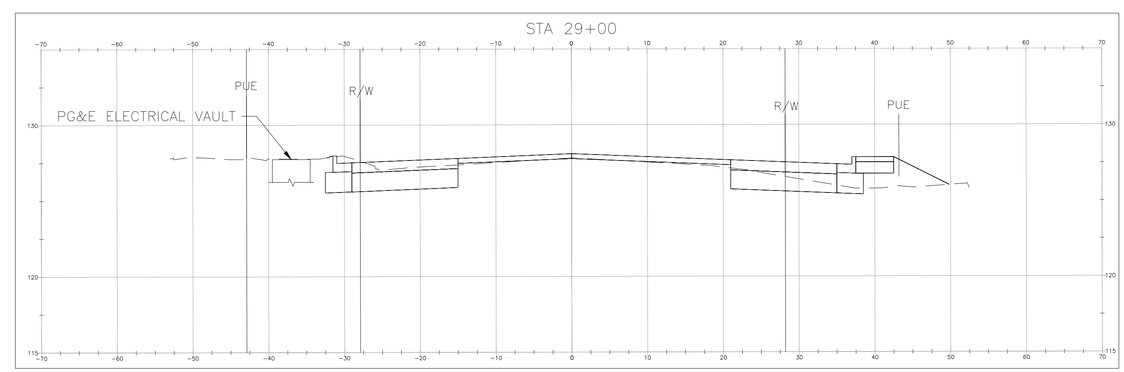

REV	DATE	BY	SUB	APR	DESCRIPTION

Stacy and Witbeck, Inc.
STV 100 Years

NOT FOR CONSTRUCTION

PREPARED BY M. CAPUNO
DRAWN BY M. CAPUNO
CHECKED BY K. TAYLOR
IN CHARGE A. SOKOL
DATE MAR 18, 2020

DESIGN PACKAGE 2
50% SUBMITTAL

MARCH 18, 2020

SONOMA-MARIN SMART AREA RAIL TRANSIT

WINDSOR EXTENSION

ROAD IMPROVEMENTS
GRADING CROSS SECTIONS
AIRPORT BOULEVARD

SHEET 37 OF 44

CADD FILENAME 24 – XS103.dwg
SCALE 1"= 10'
CONTRACT NO. CV-DB-18-001
DWG. NO. XS103
MILEPOST 59.9

CapunoMJ Mar 30, 2020 – 3:25pm I:\Projects\4020430\4020430_0001\90_CAD Models and Sheets\05 Construction Packages\14 Windsor Extension\003 DWG\04 SHEETS\06 Civil\24 – XS103.dwg

EXHIBIT A

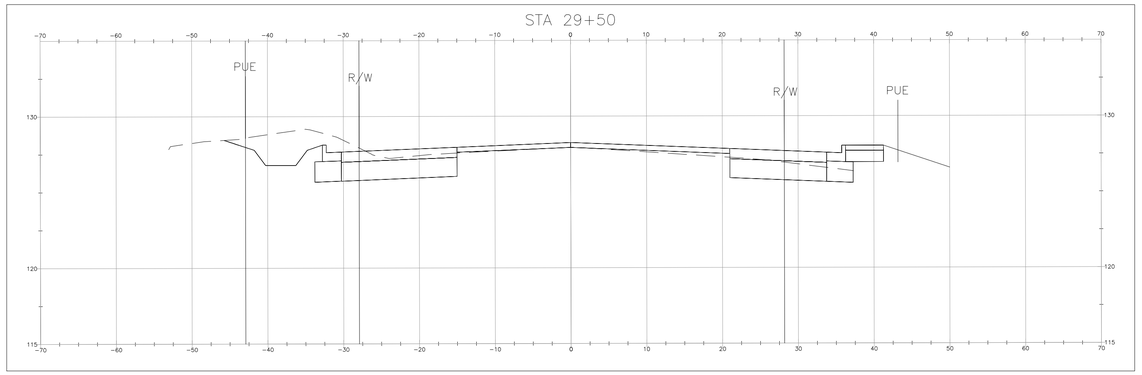

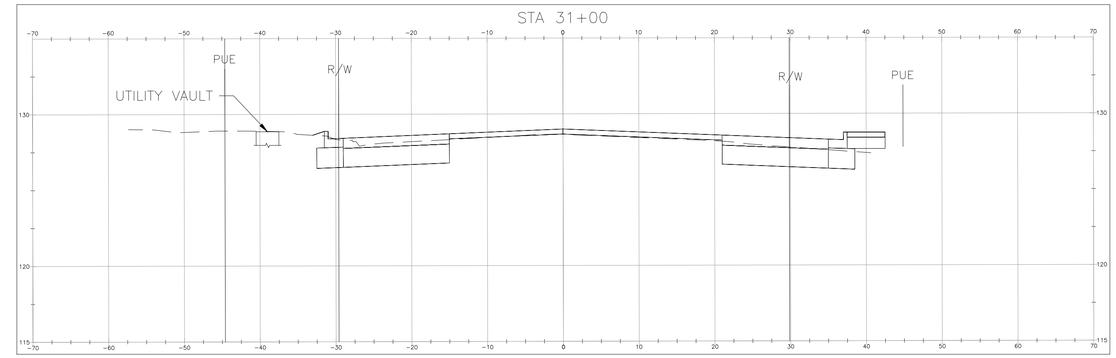

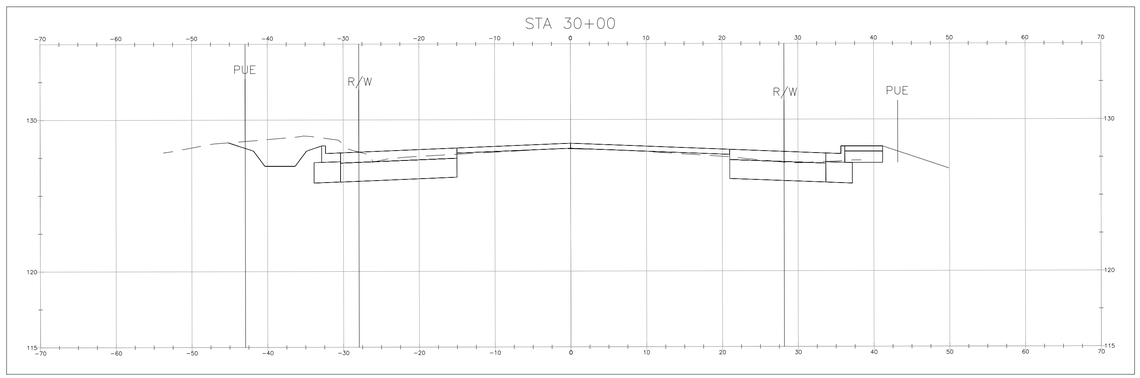

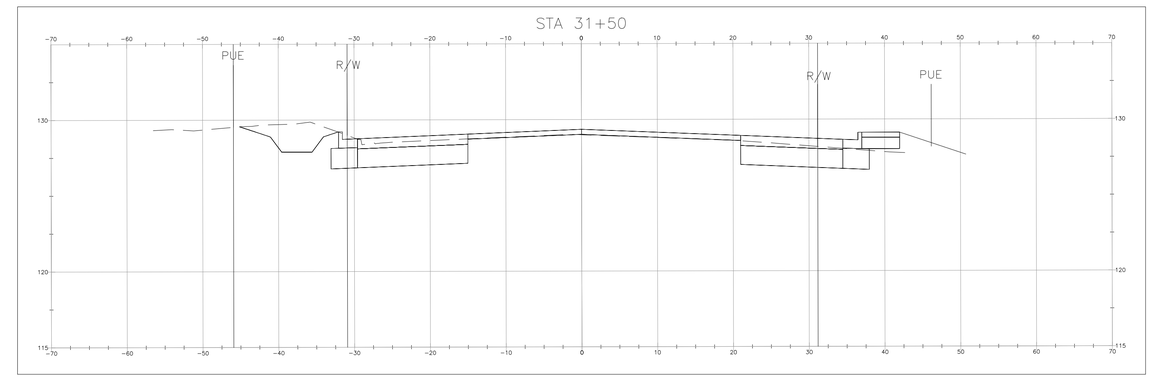

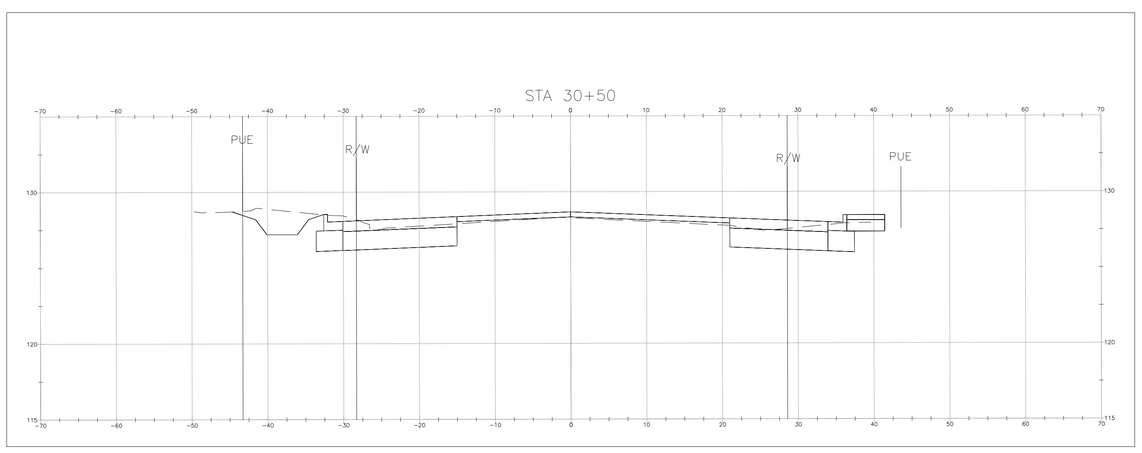

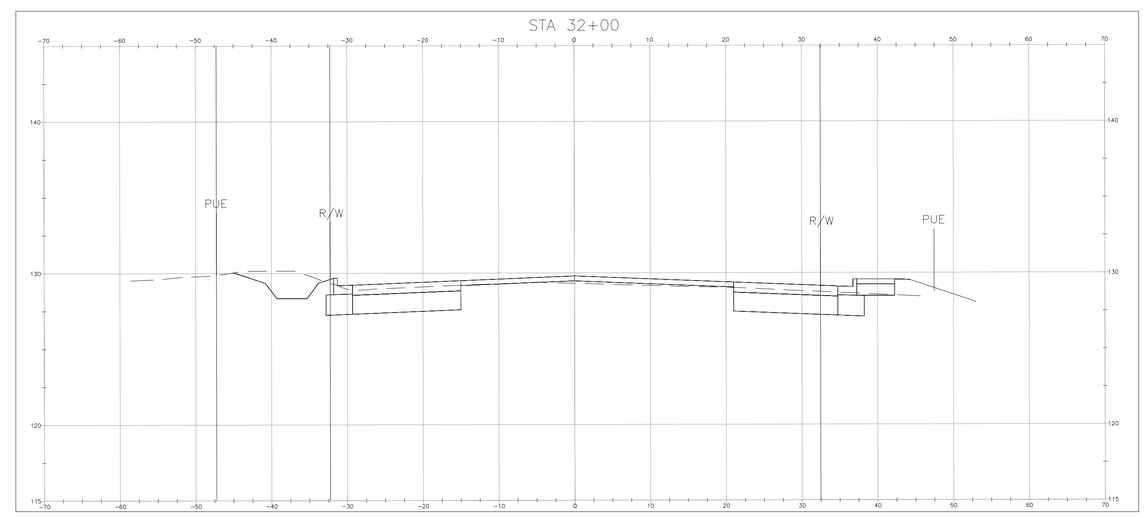

REV	DATE	BY	SUB	APR	DESCRIPTION

Stacy and Witbeck, Inc.
STV 100 Years

NOT FOR CONSTRUCTION

PREPARED BY M. CAPUNO
DRAWN BY M. CAPUNO
CHECKED BY K. TAYLOR
IN CHARGE A. SOKOL
DATE MAR 18, 2020

DESIGN PACKAGE 2
50% SUBMITTAL

MARCH 18, 2020

SONOMA-MARIN SMART AREA RAIL TRANSIT

WINDSOR EXTENSION
ROAD IMPROVEMENTS
GRADING CROSS SECTIONS
AIRPORT BOULEVARD

SHEET 38 OF 44

CADD FILENAME 25 – XS104.dwg
SCALE 1"= 10'
CONTRACT NO. CV-DB-18-001
DWG. NO. XS104
MILEPOST 59.9

CapunoMJ Mar 30, 2020 – 3:26pm I:\Projects\4020430\4020430_0001\90_CAD Models and Sheets\05 Construction Packages\14 Windsor Extension\003 DWG\04 SHEETS\06 Civil\25 – XS104.dwg

EXHIBIT A

STA 32+50

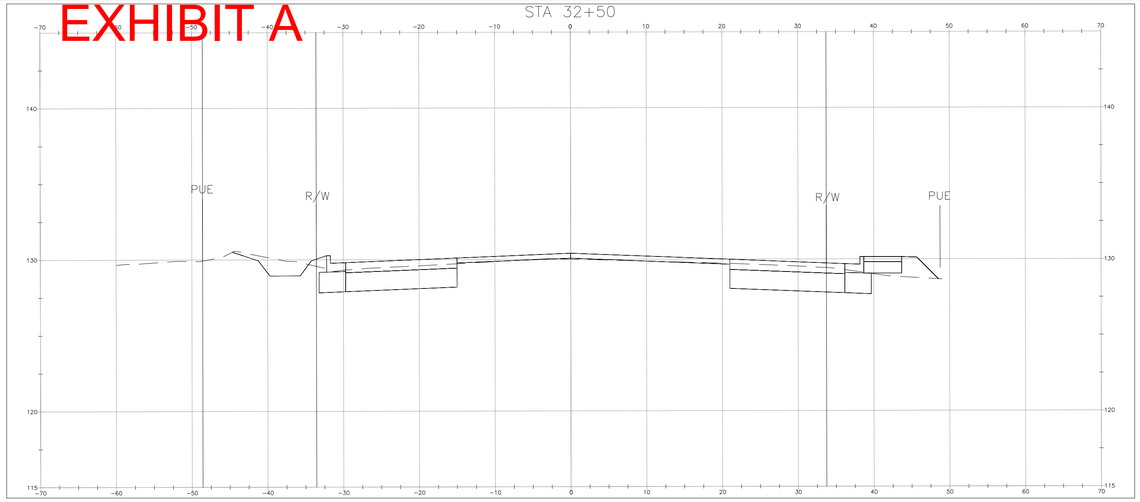

STA 33+50

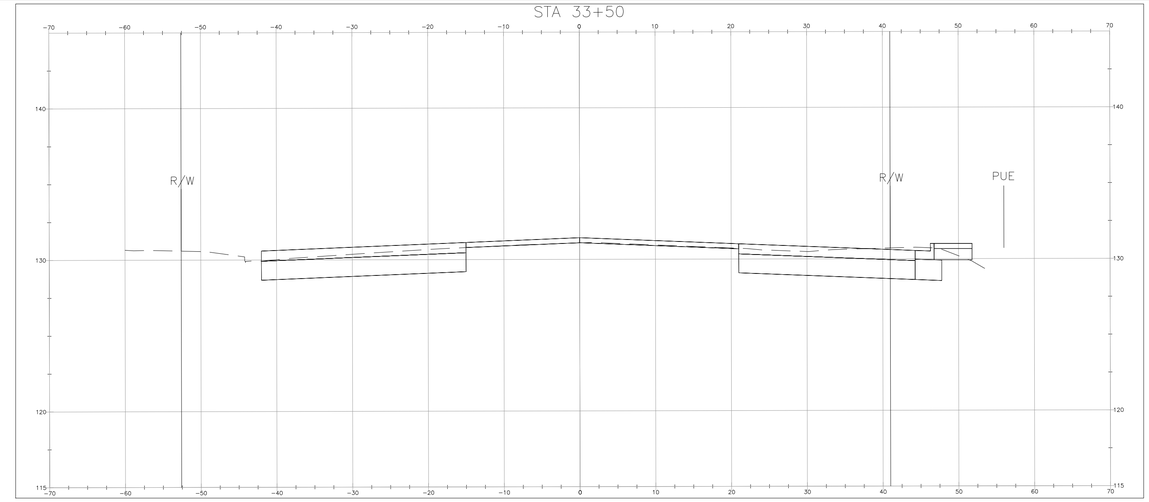

STA 33+00

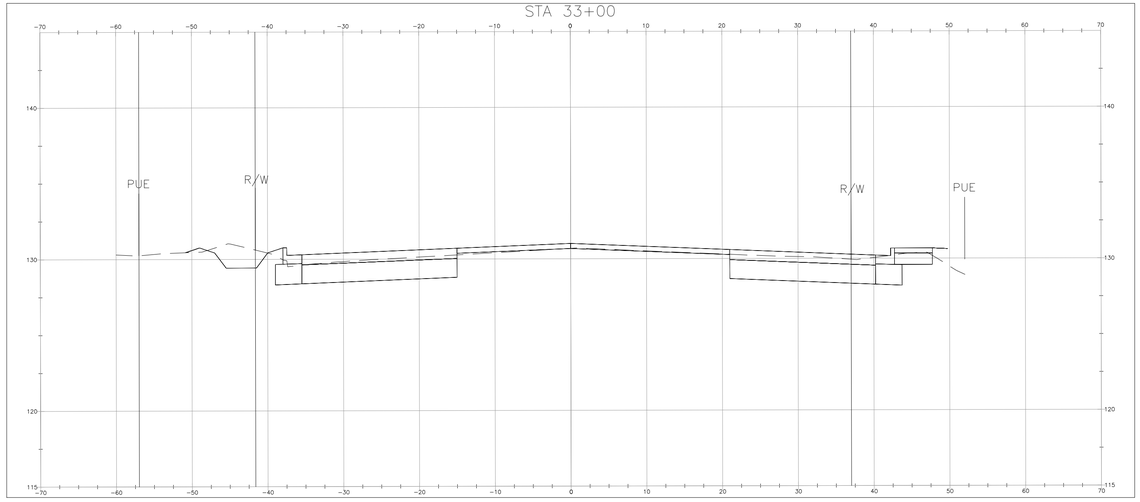

STA 34+00

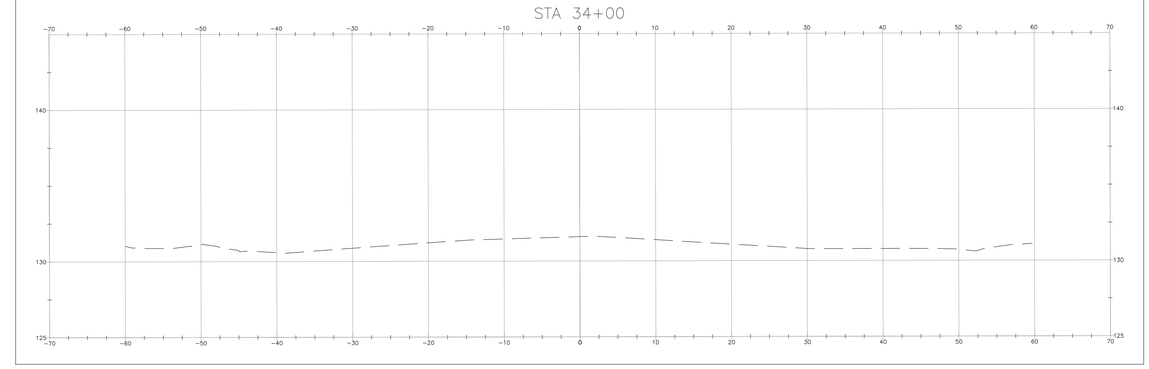

STA 34+50

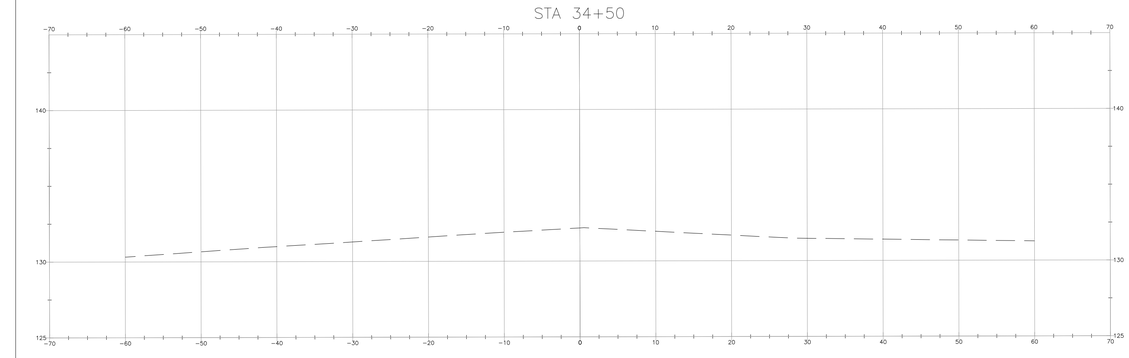

REV	DATE	BY	SUB	APR	DESCRIPTION

Stacy and Witbeck, Inc.
STV 100 Years

NOT FOR CONSTRUCTION

PREPARED BY M. CAPUNO
DRAWN BY M. CAPUNO
CHECKED BY K. TAYLOR
IN CHARGE A. SOKOL
DATE MAR 18, 2020

DESIGN PACKAGE 2
50% SUBMITTAL

MARCH 18, 2020

SONOMA-MARIN SMART AREA RAIL TRANSIT

WINDSOR EXTENSION

ROAD IMPROVEMENTS
GRADING CROSS SECTIONS
AIRPORT BOULEVARD

SHEET 39 OF 44

CADD FILENAME 26 – XS105.dwg
SCALE 1"= 10'
CONTRACT NO. CV-DB-18-001
DWG. NO. XS105
MILEPOST 59.9

EXHIBIT A

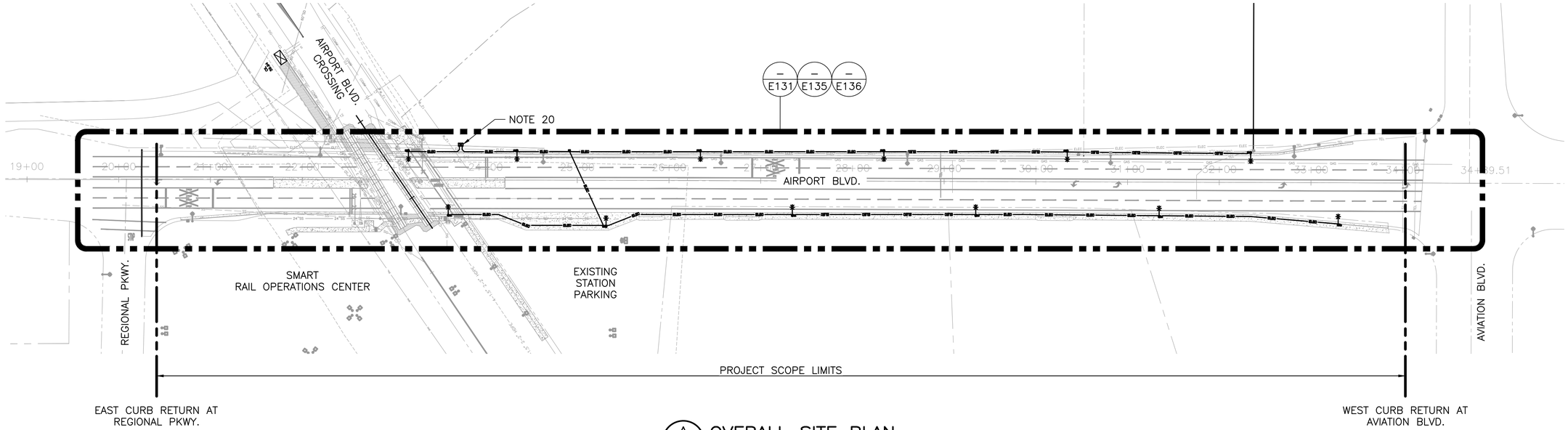

A / E130 OVERALL SITE PLAN
SCALE: 1" = 60'-0"

GENERAL LIGHTING NOTES:

1. EXCEPT AS NOTED, ALL ELECTRICAL WORK SHALL CONFORM TO SONOMA COUNTY CONSTRUCTION STANDARDS, APPLICABLE SECTIONS OF THE CURRENT CALTRANS STANDARD PLANS AND SPECIFICATIONS, THE CURRENT EDITION OF THE NATIONAL ELECTRICAL CODE (NEC) AS WELL AS PG&E GREENBOOK REQUIREMENTS WHERE APPLICABLE.
2. MINIMUM ILLUMINATION LEVELS CONFORM TO ANSI STANDARD RP-8-00 "ROADWAY LIGHTING" AS REFERENCED WITHIN THE CALTRANS STANDARD SPECIFICATIONS FOR LIGHTING DESIGN.
3. THE LIGHTING SOFTWARE USED FOR PHOTOMETRIC CALCULATIONS IS "DESIGN MASTER PHOTOMETRICS", VERSION 1.1.24.
4. THE LOCATIONS OF PULL BOXES, CONDUIT RUNS, POLE FOUNDATIONS AND OTHER ELECTRICAL EQUIPMENT SHOWN ON THE PLANS ARE APPROXIMATE AND MAY BE CHANGED TO SUIT FIELD CONDITIONS AS DIRECTED BY THE ENGINEER. THE EXACT LOCATIONS OF ALL POLES AND EQUIPMENT SHALL BE DETERMINED BY THE COUNTY INSPECTOR.
5. EXISTING "STAB" LIGHT POLES AND FOUNDATIONS DO NOT CONFORM TO LATEST SONOMA COUNTY CONSTRUCTION STANDARDS AND MUST BE REPLACED.
6. ALL NEW FIXTURES MAST ARMS AND FOUNDATIONS SHALL CONFORM TO DETAILS 610, 616, 618 & 620 ON DRAWING ED06.
7. LIGHT POLES, MAST ARMS AND HARDWARE SHALL BE GALVANIZED STEEL.
8. STREET LIGHT POLES SHALL BE MANUFACTURED BY AMERON, VALMONT, UNION METAL OR AN APPROVED EQUAL.
9. REMOVE EXISTING LIGHTING PULL BOXES AND REPLACE WHERE NOTED. NEW PULL BOXES SHALL CONFORM TO DETAIL 600 (WHEN PLACED OUTSIDE CONCRETE SIDEWALK AREAS) OR 602 ON DRAWING ED06. SEE PLAN FOR EACH BOX TYPE TO BE USED.
10. PULL BOXES SHALL BE INSTALLED WITHIN 5 FEET OF THE BASE OF EACH LIGHT POLE. PULL BOXES SHALL NOT BE PLACED WHERE THEY WILL BE SUBJECT TO VEHICLE TRAFFIC.
11. LED LIGHTING FIXTURE WIRING SHALL CONFORM TO DETAIL 605 ON DRAWING ED06.
12. MINIMUM FIELD WIRE SIZE SHALL BE #8 AND MINIMUM POLE WIRE SIZE SHALL BE #10.
13. LIGHTING CONDUIT ROUTING AND STUB-UP SHALL CONFORM TO DETAILS 600, 602, 606 AND 616 ON DRAWING ED06.
14. ALL UNDERGROUND CONDUIT SHALL BE GALVANIZED RIGID STEEL OR RIGID NON-METALLIC SCHEDULE 40 (PVC) UNLESS OTHERWISE SPECIFIED.
15. ALL UNDERGROUND CONDUIT SHALL HAVE A MINIMUM OF 30 INCHES OF CONCRETE OR CDF SLURRY COVER.
16. ALL UNDERGROUND CONDUIT SHALL BE INSTALLED BEFORE THE FINAL LIFT OF ASPHALT AND/OR CONCRETE CURB, GUTTER AND SIDEWALK IS INSTALLED.
17. THE ENDS OF ALL CONDUIT SHALL HAVE BELL ENDS AND BE SEALED WITH A DUCT SEAL APPROVED BY THE ENGINEER.
18. ALL EMPTY CONDUIT SHALL HAVE A PULL ROPE AND (1) #8 TRACE WIRE INSTALLED.
19. STREET LIGHTING CONDUIT SHALL BE PLACED IN THE ROADWAY AT THE LIP OF THE GUTTER.
20. CONNECT STREET LIGHTING SYSTEM TO PG&E METER WHERE SHOWN. SEE ONE LINE ON DRAWING ESW111 FOR CIRCUIT DETAILS.
21. CONTRACTOR SHALL STAGE WORK WHILE CHANGING OVER FROM THE EXISTING LIGHTING SYSTEM TO THE MODIFIED SYSTEM TO ALLOW FOR LIGHTING TO REMAIN OPERATIONAL BETWEEN THE HOURS OF SUN DOWN TO SUN UP.

LEGEND:

- = EXISTING PULL BOX – REMOVE AND REPLACE WHERE NOTED – SEE NOTE 9
- = NEW LIGHTING PULL BOX – SEE NOTES 9 – 10
- = PG&E SERVICE LOCATION – SEE NOTE 20
- = EXISTING STREET LIGHT POLE – REMOVE AND REPLACE WHERE NOTED
- = EXISTING SMART FACILITY LIGHT POLE – SHOWN FOR PHOTOMETRIC REFERENCE
- = NEW LIGHT POLE, SEE NOTES 5 – 8
- = NEW CONDUIT RUN, SEE NOTES 11 – 19

N

60' 0' 60' 80'
SCALE

REV	DATE	BY	SUB	APR	DESCRIPTION

Stacy and Witbeck, Inc.
STV 100 Years

NOT FOR CONSTRUCTION

PREPARED BY C. HARPER
DRAWN BY C. HARPER
CHECKED BY M. CAREY
IN CHARGE A. SOKOL
DATE MAR 18, 2020

DESIGN PACKAGE 2
50% SUBMITTAL

MARCH 18, 2020

SONOMA-MARIN SMART AREA RAIL TRANSIT

WINDSOR EXTENSION
ELECTRICAL
AIRPORT BOULEVARD
LIGHTING SCOPE LIMITS AND SITE KEY PLAN

SHEET 40 OF 44

CADD FILENAME E130.dwg
SCALE AS NOTED
CONTRACT NO. CV-DB-18-001
DWG. NO. E130
MILEPOST N/A

harperc0 Mar 17, 2020 – 7:22am \\stvgroup.stvinc.com\v3\DGPA\Vol3\Projects\4020430\4020430_00011\90_CAD Models and Sheets\05 Construction Packages\14 Windsor Extension\003 DWG\04 SHEETS\15 Traffic\E130.dwg

EXHIBIT A

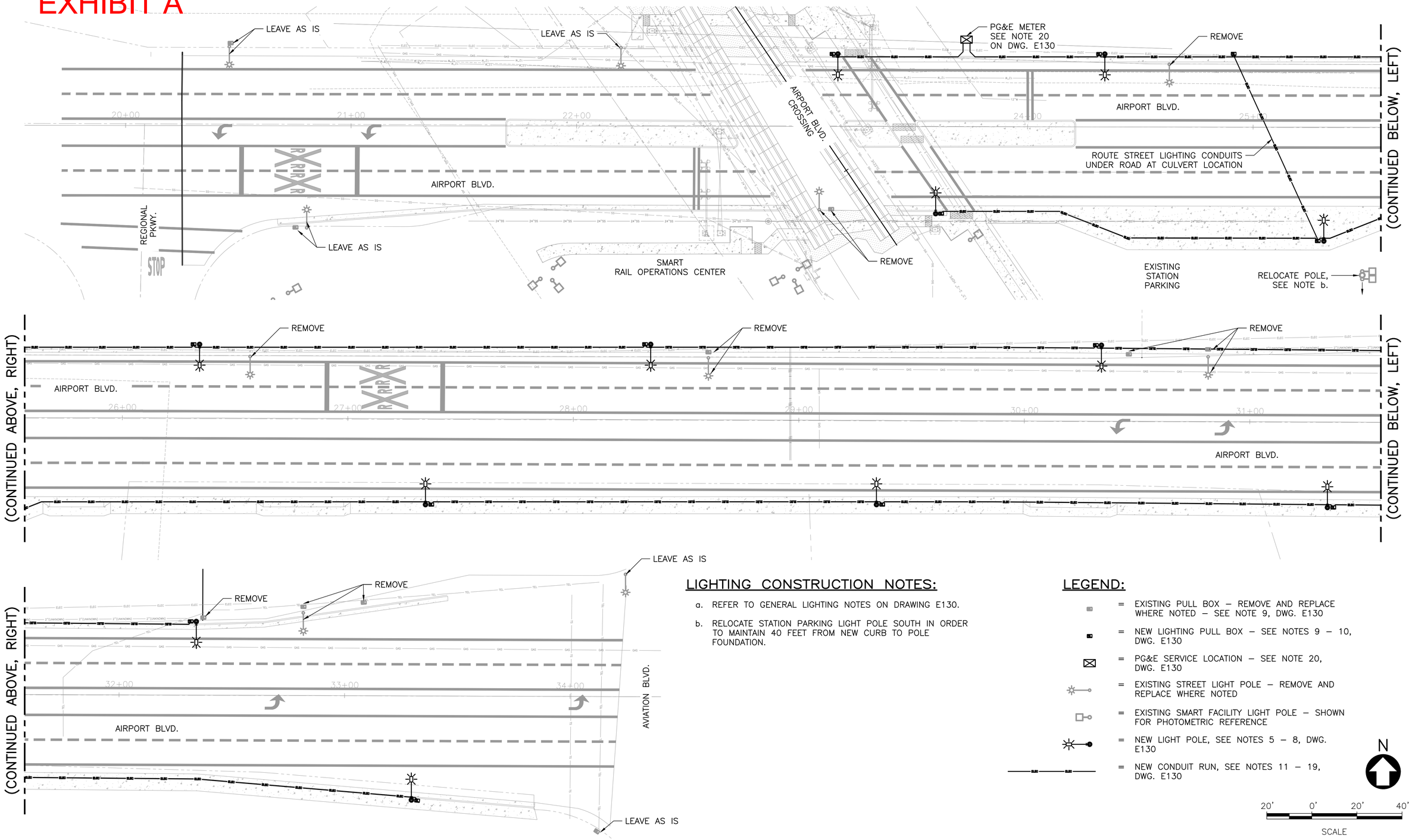

LIGHTING CONSTRUCTION NOTES:

a. REFER TO GENERAL LIGHTING NOTES ON DRAWING E130.

b. RELOCATE STATION PARKING LIGHT POLE SOUTH IN ORDER TO MAINTAIN 40 FEET FROM NEW CURB TO POLE FOUNDATION.

LEGEND:

= EXISTING PULL BOX – REMOVE AND REPLACE WHERE NOTED – SEE NOTE 9, DWG. E130

= NEW LIGHTING PULL BOX – SEE NOTES 9 – 10, DWG. E130

= PG&E SERVICE LOCATION – SEE NOTE 20, DWG. E130

= EXISTING STREET LIGHT POLE – REMOVE AND REPLACE WHERE NOTED

= EXISTING SMART FACILITY LIGHT POLE – SHOWN FOR PHOTOMETRIC REFERENCE

= NEW LIGHT POLE, SEE NOTES 5 – 8, DWG. E130

= NEW CONDUIT RUN, SEE NOTES 11 – 19, DWG. E130

N

20' 0' 20' 40'

SCALE

REV	DATE	BY	SUB	APR	DESCRIPTION

Stacy and Witbeck, Inc.

STV 100 Years

NOT FOR CONSTRUCTION

PREPARED BY C. HARPER
DRAWN BY C. HARPER
CHECKED BY M. CAREY
IN CHARGE A. SOKOL
DATE MAR 18, 2020

DESIGN PACKAGE 2
50% SUBMITTAL

MARCH 18, 2020

SONOMA-MARIN SMART AREA RAIL TRANSIT

WINDSOR EXTENSION

ELECTRICAL
AIRPORT BOULEVARD
LIGHTING LAYOUT AND CONDUIT

SHEET 41 OF 44

CADD FILENAME E130.dwg
SCALE AS NOTED
CONTRACT NO. CV-DB-18-001
DWG. NO. E131
MILEPOST N/A

harpercd Mar 17, 2020 – 7:23am \\sthgroup.stvinc.com\v3\DGPA\Vol3\Projects\4020430\4020430_0001\90_CAD Models and Sheets\05 Construction Packages\14 Windsor Extension\003 DWG\04 SHEETS\15 Traffic\E130.dwg

EXHIBIT A

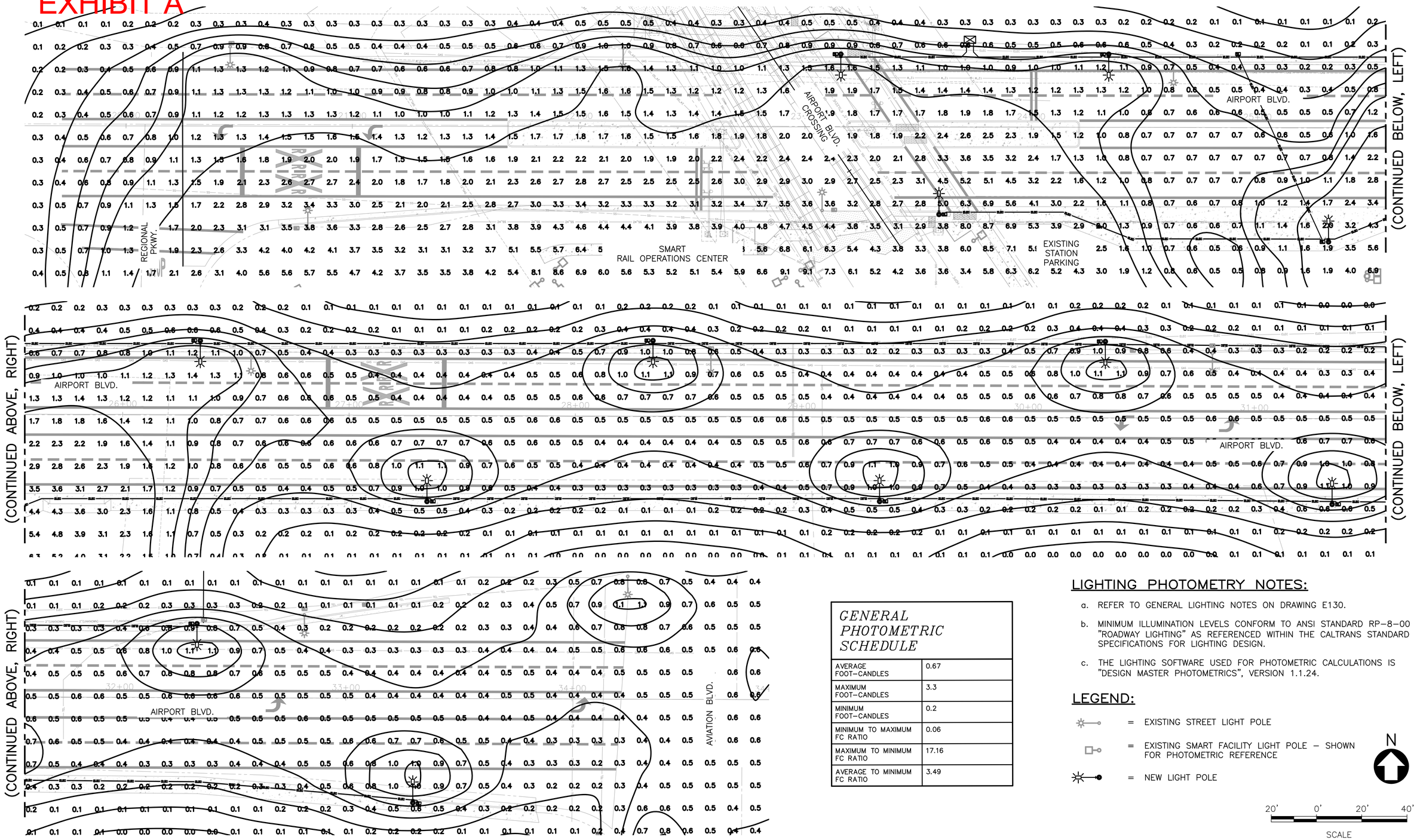

GENERAL PHOTOMETRIC SCHEDULE

AVERAGE FOOT–CANDLES	0.67
MAXIMUM FOOT–CANDLES	3.3
MINIMUM FOOT–CANDLES	0.2
MINIMUM TO MAXIMUM FC RATIO	0.06
MAXIMUM TO MINIMUM FC RATIO	17.16
AVERAGE TO MINIMUM FC RATIO	3.49

LIGHTING PHOTOMETRY NOTES:

a. REFER TO GENERAL LIGHTING NOTES ON DRAWING E130.

b. MINIMUM ILLUMINATION LEVELS CONFORM TO ANSI STANDARD RP–8–00 "ROADWAY LIGHTING" AS REFERENCED WITHIN THE CALTRANS STANDARD SPECIFICATIONS FOR LIGHTING DESIGN.

c. THE LIGHTING SOFTWARE USED FOR PHOTOMETRIC CALCULATIONS IS "DESIGN MASTER PHOTOMETRICS", VERSION 1.1.24.

LEGEND:

= EXISTING STREET LIGHT POLE

= EXISTING SMART FACILITY LIGHT POLE – SHOWN FOR PHOTOMETRIC REFERENCE

= NEW LIGHT POLE

N

20' 0' 20' 40'

SCALE

REV	DATE	BY	SUB	APR	DESCRIPTION

Stacy and Witbeck, Inc.

STV 100 Years

NOT FOR CONSTRUCTION

PREPARED BY C. HARPER
DRAWN BY C. HARPER
CHECKED BY M. CAREY
IN CHARGE A. SOKOL
DATE MAR 18, 2020

DESIGN PACKAGE 2
50% SUBMITTAL

MARCH 18, 2020

SONOMA-MARIN SMART AREA RAIL TRANSIT

WINDSOR EXTENSION

ELECTRICAL
AIRPORT BOULEVARD
PROPOSED LIGHTING PHOTOMETRICS

SHEET 42 OF 44

CADD FILENAME E130.dwg
SCALE AS NOTED
CONTRACT NO. CV–DB–18–001
DWG. NO. E135
MILEPOST N/A

harperc d Mar 17, 2020 – 7:24am \\stwgroup.stvinc.com\v3\DGPA\Vol3\Projects\4020430\4020430_0001\90_CAD Models and Sheets\05 Construction Package\14 Windsor Extension\003 DWG\04 SHEETS\15 Traffic\E130.dwg

EXHIBIT A

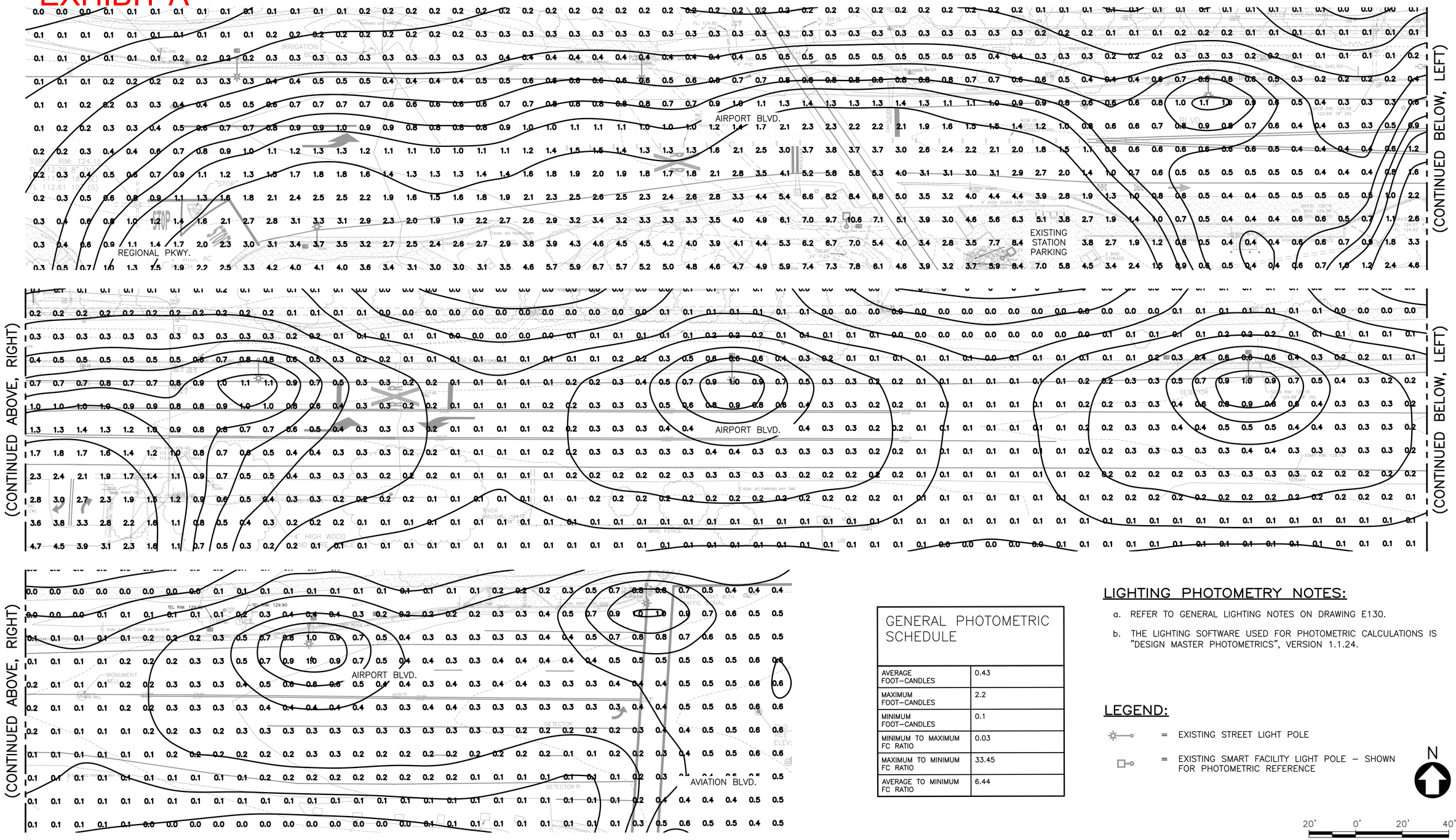

GENERAL PHOTOMETRIC SCHEDULE

AVERAGE FOOT–CANDLES	0.43
MAXIMUM FOOT–CANDLES	2.2
MINIMUM FOOT–CANDLES	0.1
MINIMUM TO MAXIMUM FC RATIO	0.03
MAXIMUM TO MINIMUM FC RATIO	33.45
AVERAGE TO MINIMUM FC RATIO	6.44

LIGHTING PHOTOMETRY NOTES:

a. REFER TO GENERAL LIGHTING NOTES ON DRAWING E130.

b. THE LIGHTING SOFTWARE USED FOR PHOTOMETRIC CALCULATIONS IS "DESIGN MASTER PHOTOMETRICS", VERSION 1.1.24.

LEGEND:

= EXISTING STREET LIGHT POLE

= EXISTING SMART FACILITY LIGHT POLE – SHOWN FOR PHOTOMETRIC REFERENCE

N

20' 0' 20' 40'

SCALE

REV	DATE	BY	SUB	APR	DESCRIPTION

Stacy and Witbeck, Inc.

STV 100 Years

NOT FOR CONSTRUCTION

PREPARED BY C. HARPER
DRAWN BY C. HARPER
CHECKED BY M. CAREY
IN CHARGE A. SOKOL
DATE MAR 18, 2020

DESIGN PACKAGE 2
50% SUBMITTAL

MARCH 18, 2020

SONOMA-MARIN SMART AREA RAIL TRANSIT

WINDSOR EXTENSION

ELECTRICAL
AIRPORT BOULEVARD
EXISTING LIGHTING PHOTOMETRICS

SHEET 43 OF 44

CADD FILENAME E130.dwg
SCALE AS NOTED
CONTRACT NO. CV–DB–18–001
DWG. NO. E136
MILEPOST N/A

harperd Mar 17, 2020 – 7:25am \\stygroup.stvinc.com\v3\DGPA\Vol3\Projects\4020430\4020430_0001\90_CAD Models and Sheets\05 Construction Packages\14 Windsor Extension\003 DWG\04 SHEETS\15 Traffic\E130.dwg

EXHIBIT A

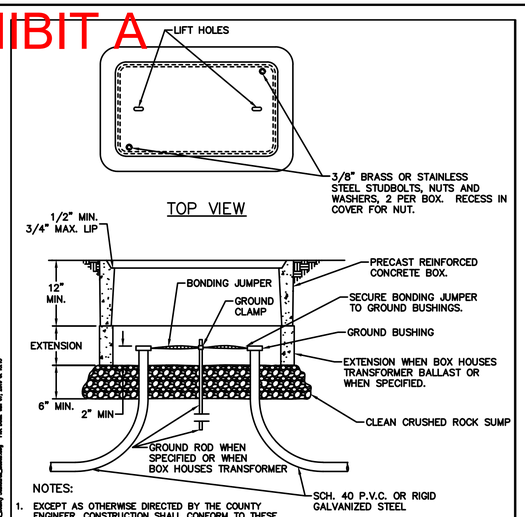

NOTES:

1. EXCEPT AS OTHERWISE DIRECTED BY THE COUNTY ENGINEER, CONSTRUCTION SHALL CONFORM TO THESE REQUIREMENTS AS WELL AS THOSE DETAILS SHOWN IN CALIFORNIA STANDARDS ES-8, UNLESS A 5(T) TRAFFIC PULL BOX IS REQUIRED (SEE NOTE 3).
2. PULL BOX COVERS SHALL BE BOLTED AND INSCRIBED "STREET LIGHTING".
3. PULL BOXES PLACED OUTSIDE OF CONCRETE SIDEWALK AREAS, CONCRETE MEDIAN ISLAND AREAS, AND PLANTED STRIP AREAS LOCATED BEHIND CURBS OR A.C. DIKES SHALL BE 5(T) TRAFFIC PULL BOXES WITH STEEL COVERS AND SPECIAL CONCRETE FOOTING. SEE DRAWING NO. 602 AND CURRENT CALIFORNIA STATE STANDARD.
4. GROUT BOTTOM OF PULL BOX PRIOR TO CONDUCTORS BEING INSTALLED.
5. GROUTED BOTTOM SHALL BE SLOPED DOWN TO 1" DRAIN HOLE.

COUNTY OF SONOMA DEPARTMENT OF TRANSPORTATION AND PUBLIC WORKS	
PULL BOX INSTALLATION NO. 5 PULL BOX	
DATE: MAY 2004	REVISED: MAY 2018
APPROVED BY:	SCALE: NONE / DRAWING NO. 600

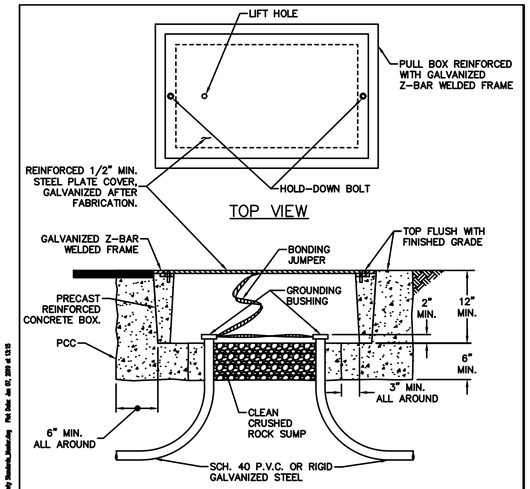

NO. 5(T) TRAFFIC PULL BOX

NOTES:

1. SEE CURRENT CALIFORNIA STATE STANDARD FOR FURTHER DETAILS.
2. GROUT BOTTOM OF PULL BOX PRIOR TO CONDUCTORS BEING INSTALLED.
3. GROUTED BOTTOM SHALL BE SLOPED DOWN TO 1" DRAIN HOLE.

COUNTY OF SONOMA DEPARTMENT OF TRANSPORTATION AND PUBLIC WORKS	
PULL BOX INSTALLATION NO. 5(T) PULL BOX	
DATE: MAY 2004	REVISED: MAY 2018
APPROVED BY:	SCALE: NONE / DRAWING NO. 602

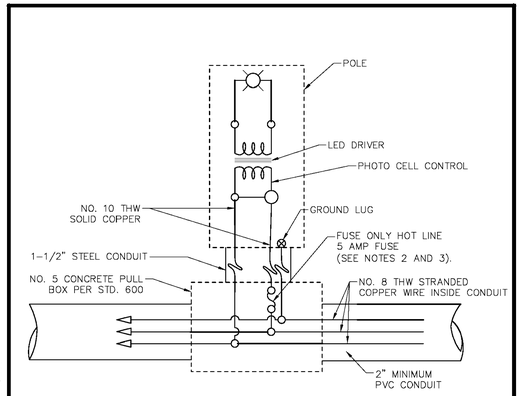

NOTES:

1. CONSTRUCTION SHALL CONFORM TO THESE REQUIREMENTS EXCEPT AS OTHERWISE DIRECTED BY THE COUNTY ENGINEER.
2. 600V 30A IN-LINE WATERPROOF FUSE HOLDER SHALL BE USED.
3. FUSE TO BE LOCATED IN THE PULL BOX.
4. ALL CONDUCTORS SHALL BE THE THW TYPE STRANDED OR SOLID COPPER. ALL NO. 8 WIRE OR LARGER SHALL BE STRANDED COPPER. ALL NO. 10 WIRE OR SMALLER SHALL BE SOLID COPPER WIRE.

COUNTY OF SONOMA DEPARTMENT OF TRANSPORTATION AND PUBLIC WORKS	
LED STREET LIGHT SCHEMATIC WIRING DIAGRAM	
DATE: MAY 2004	REVISED: MAY 2018
APPROVED BY:	SCALE: NONE / DRAWING NO. 605

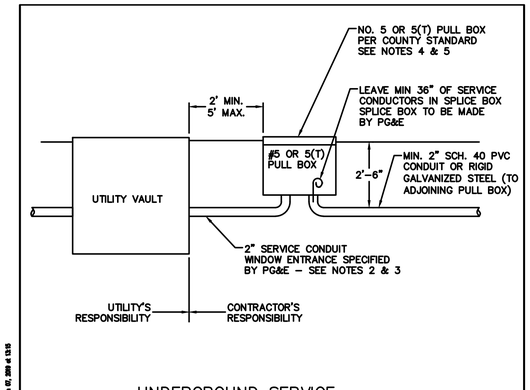

UNDERGROUND SERVICE

NOTES:

1. CONSTRUCTION SHALL CONFORM TO THESE REQUIREMENTS EXCEPT AS OTHERWISE DIRECTED BY THE COUNTY ENGINEER.
2. CONTRACTOR SHALL INSTALL SERVICE CONDUIT INTO UTILITY COMPANY VAULT UNDER THE DIRECTION OF THE UTILITY COMPANY.
3. CONTRACTOR SHALL INSTALL #5 OR 5(T) PULL BOX, 2" SERVICE CONDUIT, AND 2" CONDUIT AND CONDUCTORS FROM EQUIPMENT TO PULL BOX.
4. CONDUIT AND CONDUCTOR TO ENTER PULL BOX THROUGH BOTTOM OF BOX. PULL BOXES SHALL BE PARALLEL WITH THE ROADWAY.
5. SEE COUNTY DRAWING NO. 600 NOT NO. 3 TO DETERMINE IF A #5 OR 5(T) PULL BOX IS REQUIRED. ALSO CHECK PLANS AND NOTES.

COUNTY OF SONOMA DEPARTMENT OF TRANSPORTATION AND PUBLIC WORKS	
ELECTRIC SERVICE DETAIL UNDERGROUND SERVICE	
DATE: MAY 2004	REVISED:
APPROVED BY:	SCALE: NONE / DRAWING NO. 606

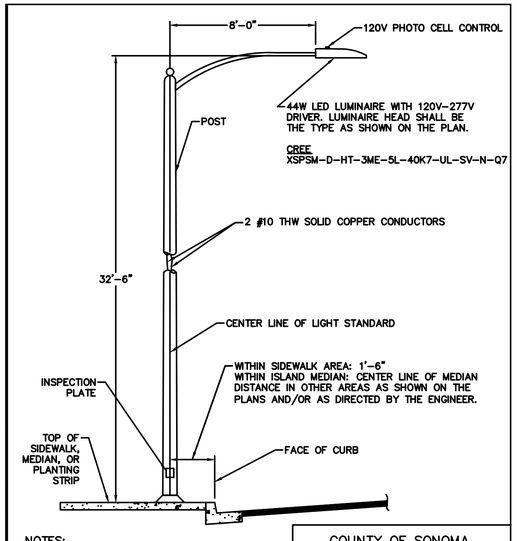

NOTES:

1. CONSTRUCTION SHALL CONFORM TO THESE REQUIREMENTS EXCEPT AS OTHERWISE DIRECTED BY THE COUNTY ENGINEER.
2. FOR DETAIL BASE, SEE DRAWING NO. 616 AND DRAWING NO. 618.
3. STREET LIGHT POLE, MASTARM AND HARDWARE SHALL BE GALVANIZED STEEL.

COUNTY OF SONOMA DEPARTMENT OF TRANSPORTATION AND PUBLIC WORKS	
STREET LIGHTS ARTERIAL STREETS	
DATE: MAY 2004	REVISED: APR. 2019
APPROVED BY:	SCALE: NONE / DRAWING NO. 610

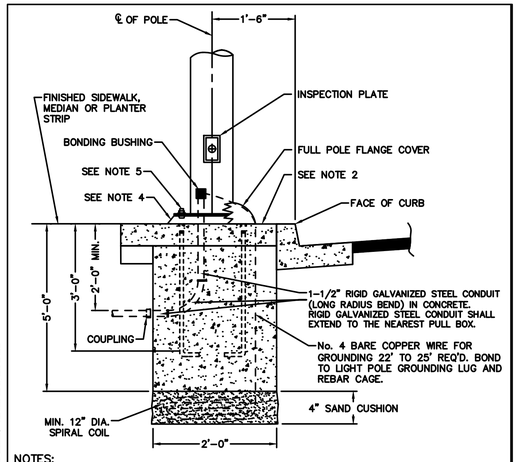

NOTES:

1. CONSTRUCTION SHALL CONFORM TO THESE REQUIREMENTS EXCEPT AS OTHERWISE DIRECTED BY THE COUNTY ENGINEER.
2. IN AREAS WHERE CONCRETE SIDEWALKS WILL BE POURED AFTER THE POLE FOUNDATION IS INSTALLED, POUR FOUNDATION TO BOTTOM ELEVATION OF SIDEWALK. IN AREAS WITHOUT CONCRETE AROUND FOOTING, CONSTRUCT A 2'x2' CONCRETE PAD (4" THICK).
3. FOUNDATION BOLTS SHALL NOT BE CUT OFF FOR ANY REASON. EXTENSION COUPLERS SHALL NOT BE PERMITTED.
4. LEVELING OF BASE SHALL CONFORM TO THE REQUIREMENTS OF STANDARD DRAWING NO. 620.
5. ANCHOR BOLT DIMENSIONS PER MANUFACTURERS SPECIFICATION. ANCHOR BOLTS SHALL BE GALVANIZED STEEL.
6. CONCRETE SHALL BE CLASS 2 P.C.C. POURED AGAINST UNDISTURBED SOIL. SEE DRAWING NO. 618 FOR FOOTING DETAILS.

COUNTY OF SONOMA DEPARTMENT OF TRANSPORTATION AND PUBLIC WORKS	
CONCRETE FOOTING DETAIL STANDARD STREET LIGHT POLE	
DATE: MAY 2004	REVISED: MAY 2018
APPROVED BY:	SCALE: NONE / DRAWING NO. 616

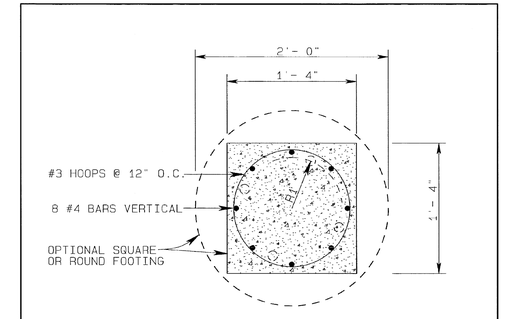

NOTES:

1. CONSTRUCTION SHALL CONFORM TO THESE REQUIREMENTS EXCEPT AS OTHERWISE DIRECTED BY THE COUNTY ENGINEER.
2. R1=ANCHOR BOLT DIAMETER DIMENSION. RADIUS AND BOLT PATTERN TO SUIT POLE BASE USED.
3. IN AREAS WHERE CONCRETE SIDEWALKS WILL BE POURED AFTER THE POLE FOUNDATION IS INSTALLED, POUR FOUNDATION TO BOTTOM ELEVATION OF SIDEWALK. IN AREAS WITHOUT CONCRETE AROUND FOOTING, CONSTRUCT A 2' X 2' CONCRETE PAD (4" THICK).
4. FOUNDATION BOLTS SHALL NOT BE CUT OFF FOR ANY REASON. EXTENSION COUPLERS SHALL NOT BE PERMITTED.
5. LEVELING OF BASE SHALL CONFORM TO THE REQUIREMENTS OF STANDARD DRAWING NO. 620.

COUNTY OF SONOMA DEPARTMENT OF TRANSPORTATION AND PUBLIC WORKS	
BASE DETAIL STANDARD STREET LIGHT POLE	
DATE: MAY 2004	REVISED:
APPROVED BY:	SCALE: NONE / DRAWING NO. 618

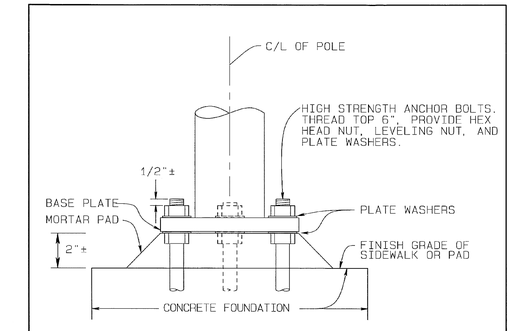

NOTES:

1. FOUNDATION BOLTS SHALL NOT BE CUT OFF FOR ANY REASON. EXTENSION COUPLERS SHALL NOT BE PERMITTED.

COUNTY OF SONOMA DEPARTMENT OF TRANSPORTATION AND PUBLIC WORKS	
STREET LIGHT BASE LEVELING DETAIL	
DATE: MAY 2004	REVISED:
APPROVED BY:	SCALE: NONE / DRAWING NO. 620

REV	DATE	BY	SUB	APR	DESCRIPTION

Stacy and Witbeck, Inc.

STV 100 Years

NOT FOR CONSTRUCTION

PREPARED BY	C. HARPER
DRAWN BY	C. HARPER
CHECKED BY	M. CAREY
IN CHARGE	A. SOKOL
DATE	MAR 18, 2020

DESIGN PACKAGE 2
50% SUBMITTAL

MARCH 18, 2020

SONOMA-MARIN SMART AREA RAIL TRANSIT

WINDSOR EXTENSION

ELECTRICAL
ROADWAY LIGHTING
SONOMA COUNTY CONSTRUCTION STANDARDS

SHEET 44 OF 44

CADD FILENAME	ED06.dwg
SCALE	AS NOTED
CONTRACT NO.	CV-DB-18-001
DWG. NO.	ED06
MILEPOST	N/A

EXHIBIT B

BUDGET - Airport Boulevard Improvements

ITEM	ESTIMATE
Design and Construction Costs	$4,210,000
Contingency (10%)	$300,000
SMART Administration	$90,000
TOTAL	**$4,600,000**