ABBREVIATIONS

&	AND	MAX	MAXIMUM
@	AT	MB	MACHINE BOLT
AC	AIR CONDITIONTING	MC	MEDICINE CABINET
ACC	ACCESSIBLE	MDO	MEDIUM DENSITY OVERLAY
ACOU	ACOUSTICAL	MECH	MECHANICAL
AD	AREA DRAIN	MEMB	MEMBRANE
ADJ	ADJUSTABLE	MFR	MANUFACTURER
AFF	ABOVE FINISH FLOOR	MH	MANHOLE
AGG	AGGREGATE	MI	MALLEABLE IRON
AL	ALUMINUM	MIN	MINIMUM
AP	ASPHALTIC PAVEMENT	MIR	MIRROR
APPROX	APPROXIMATE	MISC	MISCELLANEOUS
ARCH	ARCHITECTURAL	MP	MULTI-PURPOSE
ASPH	ASPHALT	MO	MASONRY OPENING
		MS	MACHINE SCREW
BB	BULLETIN BOARD	MTD	MOUNTED
BD	BOARD	MTL	METAL
BITUM	BITUMINOUS	MUL	MULLION
BLDG	BUILDING		
BLK	BLOCK	(N)	NEW
BLKG	BLOCKING	N	NORTH
BM	BEAM	NIC	NOT IN CONTRACT
BOT	BOTTOM	NO. or #	NUMBER
BS	BOTH SIDES	NOM	NOMINAL
		NTS	NOT TO SCALE
CAB	CABINET		
CB	CATCH BASIN	OA	OVERALL
CEM	CEMENT	OBS	OBSCURE
CER	CERAMIC	OC	ON CENTER
CFCI	CONTRACTOR FURNISHED, CONTRACTOR INSTALLED	OD	OUTSIDE DIMENSION
		OFCI	OWNER FURNISHED, CONTRACTOR INSTALLED
CFOI	CONTRACTOR FURNISHED, OWNER INSTALLED	OFOI	OWNER FURNISHED, OWNER INSTALLED
CH	COAT HOOK		
CI	CAST IRON	OFD	OVERFLOW DRAIN
CLF	CHAIN LINK FENCE	OFF	OFFICE
CLG	CEILING	OPNG	OPENING
CLKG	CAULKING	OPP	OPPOSITE
CLO	CLOSET		
CLR	CLEAR	PB	PLANE BREAK
CMU	CONCRETE MASONRY UNIT	PC	PIECE or PORTLAND CEMENT
		PDP	POWER DRIVEN PIN
CNTR	COUNTER	PL	PLATE
CO	CLEAN OUT	PLAM	PLASTIC LAMINATE
COL	COLUMN	PLAS	PLASTER
CONC	CONCRETE	PLYWD	PLYWOOD
CONN	CONNECTION	PMF	PRESSED METAL FRAME
CONSTR	CONSTRUCTION	PNL	PANEL
CONT	CONTINUOUS	PP	POWER POLE
CORR	CORRIDOR	PR	PAIR
CTSK	COUNTERSUNK	PRCST	PRE-CAST
CTR	CENTER	PT	POINT or PRESSURE TREATED
CVG	CLEAR VERTICAL GRAIN	PTD	PAPER TOWEL DISPENSER
		PTD/R	COMBINATION PAPER TOWEL DISPENSER/RECEPTACLE
DBL	DOUBLE		
DEPT	DEPARTMENT	PTN	PARTITION
DET	DETAIL	PTR	PAPER TOWEL RECEPTACLE
DF	DOUGLAS FIR or DRINKING FOUNTAIN	QT	QUARRY TILE
DI	DROP INLET		
DIA	DIAMETER	R or RAD	RADIUS
DIM	DIMENSION	RD	ROOF DRAIN
DISP	DISPENSER	REC	RECESSED
DN	DOWN	RECEPT	RECEPTACLE
DO	DITTO	REF	REFERENCE
DR	DOOR	REFR	REFRIGERATOR
DS	DOWNSPOUT	REINF	REINFORCED
SDP	DRY STANDPIPE	REQ'D	REQUIRED
DWG	DRAWING	RESIL	RESILIENT
DWR	DRAWER	REV	REVERSE
DW	DISHWASHER	RGTR	REGISTER
		RH	ROUND HEAD
E	EAST	RM	ROOM
(E)	EXISTING	RO	ROUGH OPENING
EA	EACH	RWD	REDWOOD
EIFS	EXTERIOR INSULATION & FINISH SYSTEM	RWL	RAIN WATER LEADER
EJ	EXPANSION JOINT	S	SOUTH
ELEC	ELECTRICAL	SC	SOLID CORE
ELEV	ELEVATION	SCD	SEAT COVER DISPENSER
EMER	EMERGENCY	SCD	SEE CIVIL DRAWINGS
ENCL	ENCLOSURE	SCHED	SCHEDULE
EOP	EDGE OF PAVEMENT	SD	SOAP DISPENSER
EP	ELECTRIC PANEL BOARD	SECT	SECTION
EQ	EQUAL	SED	SEE ELECTRICAL DRAWINGS
EQUIP	EQUIPMENT	SH	SHELF
EWC	ELECTRIC WATER COOLER	SHR	SHOWER
EXP	EXPANSION	SHT	SHEET
EXPO	EXPOSED	SHTG	SHEATHING
EXT	EXTERIOR	SIM	SIMILAR
		SLD	SEE LANDSCAPE DRAWINGS
FA	FIRE ALARM	SMD	SEE MECHANICAL DRAWINGS
FB	FLAT BAR	SMS	SHEET METAL SCREWS
FD	FLOOR DRAIN	SND	SANITARY NAPKIN DISPENSER
FDN	FOUNDATION	SNR	SANITARY NAPKIN
FE	FIRE EXTINGUISHER	RECEPTACLE	
FEC	FIRE EXTINGUISHER CABINET	SNTD	SANITARY NAPKIN & TAMPON DISPENSER
FFE	FINISH FLOOR ELEVATION	SPD	SEE PLUMBING DRAWINGS
		SPEC	SPECIFICATIONS
FG	FINISH GRADE	SQ	SQUARE
FH	FLAT HEAD	SSD	SEE STRUCTURAL DRAWINGS
FHC	FIRE HOSE CABINET	SST	STAINLESS STEEL
FIN	FINISH	SSK	SERVICE SINK
FLR	FLOOR	STA	STATION
FLUOR	FLUORESCENT	STD	STANDARD
FO	FRAME OPENING	STL	STEEL
FOB	FACE OF BLOCK	STOR	STORAGE
FOC	FACE OF CONCRETE or CURB	STRL	STRUCTURAL
		SUSP	SUSPENDED
FOF	FACE OF FINISH	SYM	SYMMETRICAL
FOS	FACE OF STUDS		
FT	FOOT or FEET	T & G	TONGUE AND GROOVE
FTG	FOOTING	TB	TOWEL BAR
FURR	FURRING	TC	TOP OF CURB or CONCRETE
FUT	FUTURE	TEL	TELEPHONE
		TER	TERRAZZO
GA	GAUGE	THK	THICK
GALV	GALVANIZED	TP	TOP OF PAVEMENT
GB	GRAB BAR	TPD	TOILET PAPER DISPENSER
GI	GALVANIZED IRON	TPD/R	TOILET PAPER DISPENSER/ RECEPTACLE
GL	GLASS		
GLB	GLUE LAM BEAM	TR	TRASH RECEPTACLE
GND	GROUND	TS	TOP SOIL
GR	GRADE	TV	TELEVISION
GSM	GALVANIZED SHEET METAL	TW	TOP OF WALL
		TYP	TYPICAL
GYP	GYPSUM		
		UON	UNLESS OTHERWISE NOTED
HB	HOSE BIB	UNO	UNLESS NOTED OTHERWISE
HC	HOLLOW CORE	UR	URINAL
HE	HIGH EFFCIENCY		
HD	HAND DRYER	VCT	VINYL COMPOSITE TILE
HDR	HEADER	VERT	VERTICAL
HDWD	HARDWOOD	VEST	VESTIBULE
HM	HOLLOW METAL	VG	VERTICAL GRAIN
HORIZ	HORIZONTAL	VTW	VINYL TACKWALL
HR	HOUR		
HRC	HOSE REEL CABINET	W	WEST
HT	HEIGHT	w/	WITH
		WC	WATER CLOSET
ID	INSIDE DIMENSION	WD	WOOD
IG	INVERT GRADE	WDW	WINDOW
INCAN	INCANDESCENT	WG	WIRE GLASS
INSUL	INSULATION	w/o	WITHOUT
INT	INTERIOR	WP	WATER PROOF
		WR	WATER RESISTANT
JAN	JANITOR	WRP	WATER REPELLANT
JP	JOINT POLE	WRR	WALL RETURN REGISTER
JST	JOIST	WS	WOOD SCREW
JT	JOINT		
KIT	KITCHEN		
LAB	LABORATORY		
LAM	LAMINATE		
LAV	LAVATORY		
LB or #	POUNDS		
LKR	LOCKER		
LT	LIGHT		
LVR	LOUVER		

SYMBOLS

COLUMN LINES (GRID LINE)
FACE OR SHEATHING OR CENTERLINE OF COLUMN, U.O.N.

ROOM TAG
ROOM NUMBER
ROOM NAME

DOOR SYMBOL
(SEE DOOR SCHEDULE)

WINDOW TYPE
(SEE WINDOW SCHEDULE)

WALL TYPE

KEY NOTE
DEMOLITION, REMODEL OR CONSTRUCTION NOTE

REVISION

MATCH LINE
ELEVATION IDENTIFICATION
SHEET NUMBER
MATCH LINE

BENCHMARK, CONTROL OR DATUM POINT

ELEVATION REFERENCE
ELEVATION IDENTIFICATION
SHEET NUMBER

SECTION REFERENCE
SECTION IDENTIFICATION
SHEET NUMBER
VIEW REFERENCE

DETAIL REFERENCE
DETAIL IDENTIFICATION
SHEET NUMBER

EXISTING GRADE (U.O.N.)

NEW FINISH GRADE

TOP OF WALL

TOP OF CONCRETE

TOP OF PAVEMENT

PROPERTY LINE

BUILDING SETBACK LINE OR ASSUMED PROPERTY LINE

NEW OR FINISHED CONTOURS

PREVIOUS CONTOURS

EXISTING CONTOURS

FENCE

SEWER LINE W/ CLEAN-OUT

WATER LINE
(H) FOR HOT WATER
(T) FOR TEMPERED WATER

STORM DRAIN W/ CLEANOUT

GAS LINE

ELECTRICAL LINE

CENTER LINE

DIMENSION LINE - FACE OF STUD, FACE OF CONCRETE, GRIDLINE, OR SIMILAR

DIMENSION LINE - CLEAR BETWEEN FACE OF FINISHES

PROJECT GENERAL NOTES

1. A COPY OF PARTS 1 TO 5, TITLE 24 SHALL BE KEPT ON THE JOB AT ALL TIMES.
2. THE BUILDING PERMIT AND AN APPROVED COPY OF THE BUILDING CONSTRUCTION DOCUMENTS SHALL BE MAINTAINED ON THE PROJECT SITE THROUGHOUT THE DURATION OF CONSTRUCTION ACTIVATES.
3. ALL WORK SHOWN IS NEW AND, IN THIS CONTRACT, UNLESS SPECIFICALLY NOTED OTHERWISE.
4. NOTES, SYMBOLS, LINE WORK AND GRAPHIC CONVENTIONS INTENDED TO APPLY TYPICALLY AT ALL LOCATIONS OF SIMILAR GRAPHIC REPRESENTATION. ANNOTATION MAY BE LIMITED TO REDUCE REDUNDANCY OR PROMOTE CLARITY. NO LIMITATION OF APPLICATION IS INTENDED EXCEPT AS SPECIFICALLY NOTED.
5. DRAWINGS ARE PREPARED FROM INFORMATION MADE AVAILABLE BY THE OWNER AND ARE NOT A GUARANTEE OF EXISTING OR CONCEALED CONDITIONS.
6. DIMENSIONS INDICATED ARE FACE OF SHEATHING (OR STUD), FACE OF CONCRETE, CENTERLINE OF COLUMN OR OTHER GRID POINT, CENTERLINE OF DOOR OR OTHER SCHEDULED OPENING, U.N.O.
7. DIMENSIONS SHOWN SHALL HAVE PREFERENCE OVER SCALE. DO NOT SCALE DRAWINGS.
8. VERIFY ALL DIMENSIONS AND CONDITIONS INDICATED, INCLUDING GRADE ELEVATIONS. NOTIFY ARCHITECT OF DISCREPANCIES.
9. FLOOR ELEVATIONS INDICATED ARE TOP OF CONCRETE SLAB OR STRUCTURAL DECK, U.N.O.
10. GRADE FOR UNIFORM SLOPE BETWEEN SPOT ELEVATIONS. GRADE TO DRAIN AWAY FROM BUILDINGS, PREVENT PONDING.
11. PROCURE AND PAY FOR ALL LICENSES, ETC. REQUIRED TO CARRY ON AND COMPLETE THE WORK.
12. VISIT SITE PRIOR TO BID, REVIEW EXISTING CONDITIONS FOR CONDITIONS WHICH MAY CONFLICT OR INTERFERE WITH WORK. NO ALLOWANCES MADE FOR FAILURE TO BECOME FAMILIAR WITH SITE CONDITIONS BEFORE BIDDING.
13. LOCATE / VERIFY CONCEALED (E) UTILITIES IN CONSTRUCTION AREAS WITH PIPE LOCATOR. CONFIRM LOCATIONS OF ALL (E) PIPES/CONDUITS INDICATED ON DRAWINGS. NOTIFY ARCHITECT IMMEDIATELY OF UNIDENTIFIED UTILITIES OR INCORRECT LOCATIONS. EXISTING UTILITY LOCATIONS ARE APPROXIMATE.
14. PROVIDE, COORDINATE AND VERIFY THE SIZE AND LOCATION OF EACH OF THE FOLLOWING: ACCESS DOORS FOR CONCEALED ELEMENTS REQUIRING ACCESS, OPENINGS, FURRING, ANCHORS, INSERTS AND BLOCKING SUPPORTING ACCESSORIES, MECHANICAL, PLUMBING AND ELECTRICAL EQUIPMENT.
15. COORDINATE AND VERIFY ROUGH-IN DIMENSIONS, FOR EQUIPMENT PROVIDED IN THIS CONTRACT AND EQUIPMENT FURNISHED OR PROVIDED BY OTHERS.
16. COORDINATE AND VERIFY ALL ELECTRICAL, MECHANICAL, TELEPHONE, FIRE ALARM AND SECURITY REQUIREMENTS BEFORE CONSTRUCTION.
17. CONTRACTOR SHALL ASSUME SOLE AND COMPLETE RESPONSIBILITY FOR JOB SITE SAFETY. COMPLY WITH APPLICABLE SAFETY REGULATIONS FOR WORKER AND PUBLIC PROTECTION DURING CONSTRUCTION.

PROJECT DIRECTORY

OWNER
COUNTY OF SONOMA - PUBLIC INFRASTRUCTURE
CONTACT: MIKE VOLATILE T: 707.565.2550
2300 COUNTY CENTER DR. SUITE A220
SANTA ROSA, CA 95403

ARCHITECT
AXIA ARCHITECTS
CONTACT: DOUG HILBERMAN T: 707.542.4652
540 MENDOCINO AVE.
SANTA ROSA ,CA 95401

STRUCTURAL ENGINEER
ZFA STRUCTURAL ENGINEERS
CONTACT: LUKE WILSON T: 707.526.0992
1212 FOURTH STREET, SUITE Z
SANTA ROSA, CA 95404

MECHANICAL ENGINEER
LEFLER ENGINEERING INC
CONTACT: TREVOR LEFLER T: 415.456.4220
1651 SECOND STREET
SAN RAFAEL, CA 94901

ELECTRICAL ENGINEER
ENGINEERING ENTERPRISES INC
CONTACT: MIKE JOHNSTON T: 707.544.7775
613 FOURTH ST, SUITE 206B
SANTA ROSA, CA 95404

GEOTECHNICAL ENGINEER
BRUNSING ASSOCIATES, INC.
CONTACT: ERIK OLSBORG 707-838-3027
5468 SKYLANE BLVD. STE. 201
SANTA ROSA, CA 95403

NOTE: PERSPECTIVE IS FOR GRAPHICAL REPRESENTATION ONLY, REFER TO OTHER PORTIONS OF PROJECT DOCUMENTS FOR CONSTRUCTABILITY.

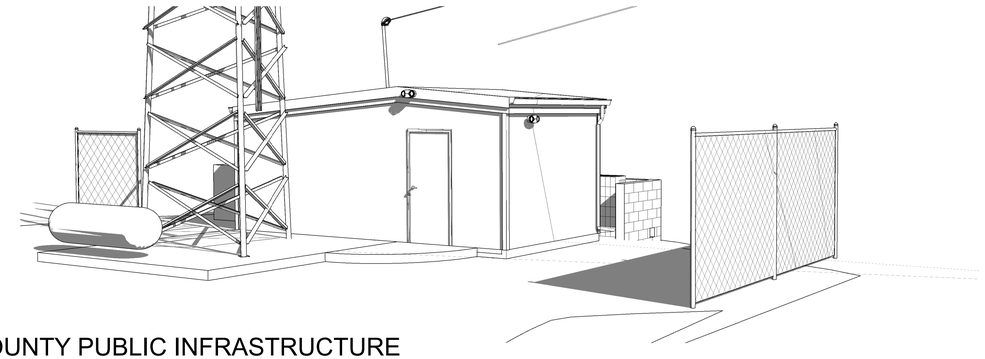

SONOMA COUNTY PUBLIC INFRASTRUCTURE

PINE MOUNTAIN ANTENNA COMMUNICATIONS BUILDING RECONSTRUCTION

PERMIT RESUBMISSION / RFP #01 - 03/24/25

APPLICABLE CODES

ALL WORK TO CONFORM TO THE FOLLOWING REQUIREMENTS:

2022 CALIFORNIA BUILDING STANDARDS CODE
2022 CALIFORNIA ADMINISTRATIVE CODE (CAC), C.C.R., TITLE 24, PART 1
2022 CALIFORNIA BUILDING CODE (CBC) C.C.R., TITLE 24, PART 2, VOLUMES 1 AND 2 (BASED ON 2018 INTERNATIONAL BUILDING CODE)
2022 CALIFORNIA ELECTRICAL CODE (CEC), C.C.R., TITLE 24, PART 3 (BASED ON 2018 NATIONAL ELECTRICAL CODE)
2022 CALIFORNIA MECHANICAL CODE (CMC), C.C.R., TITLE 24, PART 4 (BASED ON 2018 UNIFORM MECHANICAL CODE)
2022 CALIFORNIA PLUMBING CODE (CPC), C.C.R., TITLE 24, PART 5 (BASED ON 2018 UNIFORM PLUMBING CODE)
2022 CALIFORNIA FIRE CODE (CFC), C.C.R., TITLE 24, PART 9 (BASED ON 2018 INTERNATIONAL FIRE CODE)

PROJECT SCOPE

THE PROJECT GENERALLY CONSISTS OF RENOVATION OF AN EXISTING COMMUNICATIONS EQUIPMENT STRUCTURE.

ACCESSIBILITY EXCEPTION

THIS PROJECT IS EXEMPT FROM ACCESSIBILITY REQUIREMENTS PER 2019 CBC 11B-203.5 MACHINERY SPACES.

WILDLAND-URBAN INTERFACE

THIS PROJECT IS IN A VERY HIGH FIRE HAZARD SEVERITY ZONE AND SUBJECT TO WILDLAND-URBAN INTERFACE REQUIREMETNS OF CBC 7A.

THE PROJECT HAS IGNITION RESISTANT CONSTRUCTION, NO VENTILATION OPENINGS, AND NON-CONMBUSTILBE DOOR.

DEFERRED APPROVAL

THE FOLLOWING SHALL BE DEFERRED SUBMITTAL(S) PREPARED BY THE CONTRACTOR:

1. NONE

CODE SUMMARY

ADDRESS : 33550 PINE MOUNTIAN ROAD, CLOVERDALE, CA 95425

APN : 117-240-051

EXISTING TOTAL BUILDING AREAS:
EXISTING STRUCTURE 225± SF GROUP U

OCCUPANCY GROUP & USE:
PROJECT SCOPE: GROUP U, COMMUNICATIONS EQUIPMENT STRUCTURERS OF LESS THAN 1,500 SF.

OCCUPANCY COUNT: (PER TABLE 1004.5)
COMMUNICATIONS VAULT: MECHANICAL EQUIPMENT ROOM, 300 GROSS
1 OCCUPANT PER 300SF x 250 SF = 1 OCCUPANTS

THIS COMMUNICATIONS EQUIPMENT STRUCTURER IS NOT CONTINIOUSLY OCCUPIED.

STRUCTURE HEIGHT & AREA: (PER TABLE 504.3, 504.4, & 506.2)
ALLOWABLE HEIGHT: 40'
ALLOWABLE STORIES: 1
ALLOWABLE ARE: 5,500 sf

CONSTRUCTION TYPE:
TYPE V-B

FIRE SPRINKLERS:
BUILDING IS NOT FIT WITH FIRE SPRINKLERS.

OCCUPANCY AND INCIDENTAL USE AREA SEPARATION: (PER TABLE 509)
NONE.

FIRE-RESISTANCE RATING: (CBC TABLE 601)

PRIMARY STRUCTURAL FRAME:	0 HR
BEARING WALLS - EXTERIOR:	2 HR
BEARING WALLS - INTERIOR:	NOT APPLICABLE
NON-BEARING WALLS - EXTERIOR:	NOT APPLICABLE
NON-BEARING WALLS - INTERIOR:	NOT APPLICABLE
FLOOR CONSTRUCTION:	0 HR
ROOF CONSTRUCTION:	0 HR

FIRE EXTINGUISHERS:
PROVIDE ONE 2-A10-BC FIRE EXTINGUISHER FOR EACH 3,000 SQUARE FEET OF SPACE. PROPOSED LOCATION INDICATED ON PLAN; CONTRACTOR SHALL CONFIRM FINAL LOCATION IN THE FIELD AS DIRECTED BY LOCAL FIRE AUTHORITY HAVING JURISDICATION.

SEQUENCE OF CONSTRUCTION

SEQUENCE OF CONSTRUCTION SHALL FOLLOW THE FORMAT OUTLINED ON SHEET G2 TO LIMIT THE TIME THE ANTENNA IS OFF LINE. EACH PHASE SHALL BE COMPLETE PRIOR TO START OF THE NEXT PHASE.

★APPROVED★
— AS NOTED —

PERMIT NO.	APPROVED BY
BLD24-3445.R01	Ronald Morris

PERMIT AND RESOURCE MANAGEMENT DEPARTMENT

APPROVED JOB COPY OF PLANS TO BE PRINTED IN COLOR AND BE ON THE JOB SITE

BUILDER SHALL NOT DEVIATE FROM THE APPROVED PLANS. REQUESTS FOR CHANGES SHALL BE MADE IN WRITING TO THE PERMIT AND RESOURCE MANAGEMENT DEPARTMENT. CHANGES MADE WITHOUT PRIOR APPROVAL SHALL BE SUBJECT TO REJECTION OF THE WORK.

APPROVAL OF THESE PLANS IS SUBJECT TO, AND DOES NOT AUTHORIZE DEVIATION FROM COMPLETE COMPLIANCE WITH CODE REQUIREMENTS, SPECIAL INSPECTION WHEN REQUIRED, AND FIELD INSPECTION.

PLEASE READ ALL PERTINENT SECTIONS OF APPLICABLE CODES.

SHEET INDEX

GENERAL
G1 TITLE SHEET
G2 CONSTRUCTION PHASING DIAGRAMS

ARCHITECTURAL
A0.1 SITE PLAN
A0.2 ENLARGED SITE PLAN
A1.1 EXISTING / DEMOLITION FLOOR PLAN & ROOF PLAN
A1.2 EXISTING / DEMOLITION REFLECTED CEILING PLAN
A1.3 EXISTING / DEMOLITION EXTERIOR ELEVATIONS
A2.1 FLOOR PLAN & ROOF PLAN
A2.2 REFLECTED CEILING PLAN
A3.0 EXTERIOR ELEVATIONS
A3.1 BUILDING SECTIONS
A5.0 INTERIOR ELEVATIONS
A8.0 DETAILS
A8.1 DETAILS

STRUCTURAL
S0.1 GENERAL NOTES AND SPECIFICATIONS
S1.1 TYPICAL CONCRETE DETAILS
S1.2 MODERNIZATION WOOD
S2.1 FOUNDATION & ROOF FRAMING DETAILS

MECHANICAL
M1.1 MECHANICAL SCHEDULE AND LEGEND
M2.1 MECHANICAL FLOOR PLAN
M3.1 TITLE 24

ELECTRICAL
E0.1 ELECTRICAL COVER SHEET AND DETAILS
E1.0 ELECTRICAL SITE PLAN
E2.0 ELECTRICAL DEMOLITION PLANS
E3.0 ELECTRICAL NEW PLANS
E4.0 ONE LINE DIAGRAM AND PANEL SCHEDULE
E5.0 TITLE-24 INDOOR LIGHTING
E6.0 TITLE-24 OUTDOOR LIGHTING

ARCHITECTURAL
A2.1 DR CONSTRUCTION PHASING DIAGRAM
A2.1 DRev2 CONSTRUCTION PHASING DIAGRAM
A2.1a ALTERNATE SLAB MODIFICATION PLAN

VICINITY MAP

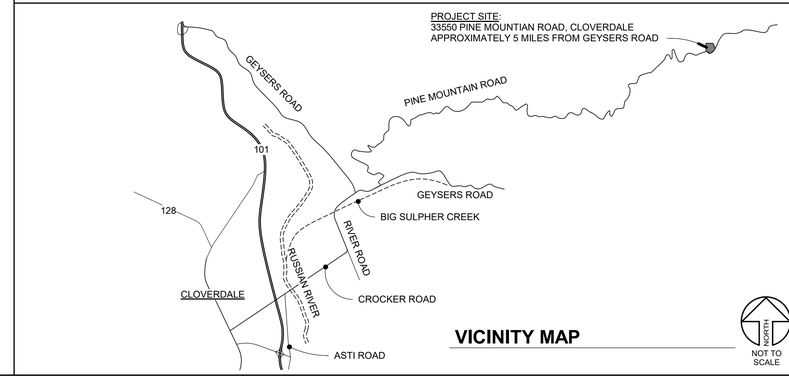

VICINITY MAP

ARCHITECT:
AXIA ARCHITECTS
540 Mendocino Ave, Santa Rosa, CA 95401
707 542-4652
axiaarchitects.com

CONSULTANT:

SONOMA COUNTY PUBLIC INFRASTRUCTURE
PINE MOUNTAIN ANTENNA COMMUNICATIONS BUILDING RECONSTRUCTION
33550 PINE MOUNTAIN RD., CLOVERDALE, CA 95425 APN: 117-240-051

Date Stamped: 4/7/2025 Permit BLD24-3445.R01 Plans Exp
REVIEWED FOR CODE COMPLIANCE - PERMIT SONOMA - BLDG
TO PERMIT SONOMA, CHANGES MADE WITHOUT PRIOR APPROVAL SHALL BE SUBJECT TO REJECTION OF THE WORK. BUILDER SHALL NOT DEVIATE FROM THE APPROVED PLANS. REQUESTS FOR CHANGES SHALL BE MADE IN WRITING TO THE PERMIT AND RESOURCE MANAGEMENT DEPARTMENT. CHANGES MADE WITHOUT PRIOR APPROVAL SHALL BE SUBJECT TO REJECTION OF THE WORK. APPROVAL OF THESE PLANS IS SUBJECT TO, AND DOES NOT AUTHORIZE DEVIATION FROM COMPLETE COMPLIANCE WITH CODE REQUIREMENTS, SPECIAL INSPECTION WHEN REQUIRED, AND FIELD INSPECTION.

SEAL:

SHEET LOG

REV #	DATE:	ISSUED FOR:

JOB NUMBER: 1191

SHEET:

G1

TITLE SHEET

ORIGINAL DATE: 03/24/25

© AXIA ARCHITECTS

3/24/2025 3:15:44 PM C:\Users\dhilberman\Documents\1191 Pine Mtn Rd Comm Vault_C_V25_dhilberman@axiaarchitects.com.rvt

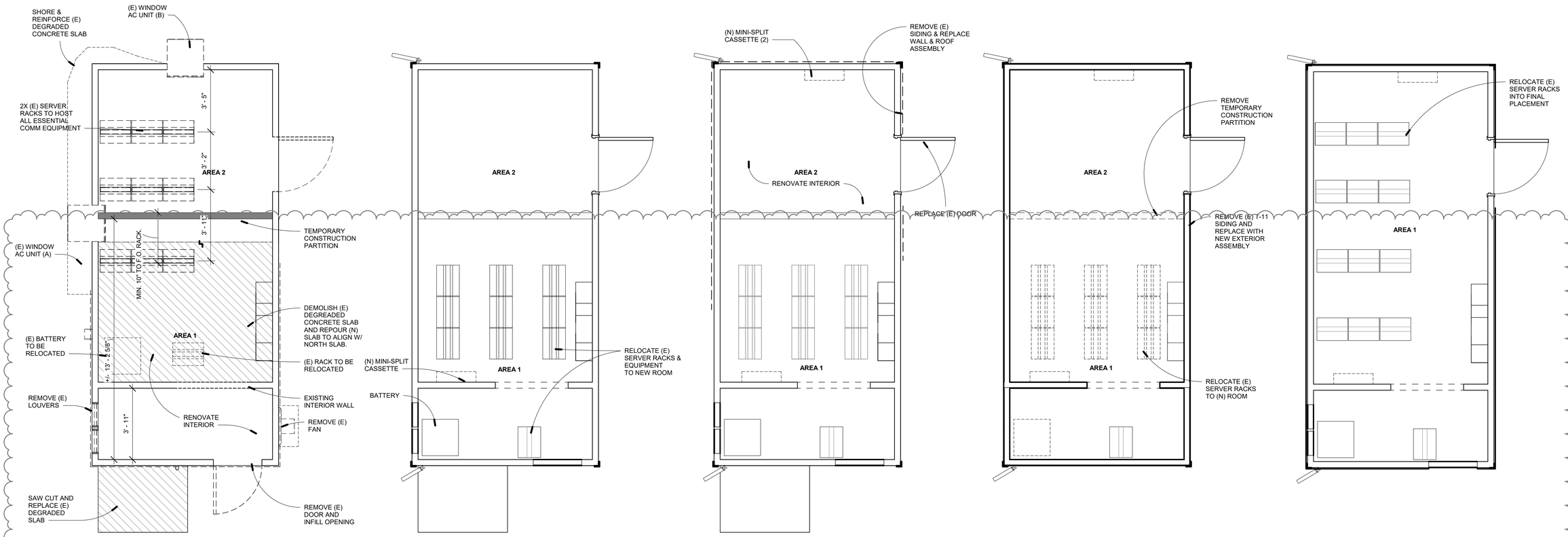

PHASE 1 - FLOOR PLAN

KEY SCOPE SUMMARY & CHRONOLOGY:

1. COUNTY TO REMOVE PORTION OF CABLE TRAY AND ZIP-TIE CABLES TO CEILING.
2. COUNTY TO RELOCATE EXISTING SERVER RACK W/ BATTERY CONTROLLER
3. COUNTY TO RELOCATE EXISTING BATTERY TO TEMPORARY SHED STRUCTURE.
4. COUNTY TO SET UP EXISTING COMMUNICATIONS EQUIPMENT IN 2 ROWS OF RACKS IN AREA 2.
5. REMOVE EXISTING WINDOW AC UNIT 'A' AND SEAL HOLE.
6. CONSTRUCT TEMPORARY INTERIOR PARTITION BETWEEN AREA 1 & AREA 2 WITH ANGLE BRACKETS TO SUPPORT CABLES.
7. REINFORCE EXISTING EXTERIOR FOUNDATION AT NORTH-WEST WALL.
8. DEMOLISH EXISTING SOUTH PARTITION WALL
9. REMOVE EXISTING T-111 SIDING, WALL FRAMING & ROOFING AT AREA 1.
10. DEMOLISH EXISTING DEGRADED (SOUTH) SLAB AT AREA 1. SAW CUT EXISTING CONCRETE PAD BETWEEN GENERATOR AND BUILDING.
11. POUR NEW CONCRETE SLAB AT AREA 1. POUR NEW CONC. PAD BETWEEN GENERATOR AND BUILDING.
12. REINFORCE STACKED WALL AND ROOF IN AREA 1. RE-FRAME WALLS & ROOF AT AREA 1. INSTALL NEW ROOF & WALL ASSEMBLY.
13. REPLACE INTERIOR FINISHES IN AREA 1.

PHASE 2 - FLOOR PLAN

KEY SCOPE SUMMARY & CHRONOLOGY:

1. INSTALL WALL-MOUNTED HVAC MINI-SPLIT CASSETTE & HEAT PUMP UNITS AT AREA 1. VERIFY OPERATIONAL PRIOR TO SERVER RACK RELOCATION.
2. TEMPORARILY RELOCATE EXISTING SERVER RACKS TO AREA 1 WHILE AREA 2 IS BEING RENOVATED.
3. COUNTY TO INSTALL BATTERY BACKUP & CONTROLLER UNIT.

PHASE 3 - FLOOR PLAN

KEY SCOPE SUMMARY & CHRONOLOGY:

1. REPLACE INTERIOR FINISHES AT AREA 2.
2. INSTALL MINI-SPLIT CASSETTE UNIT AT AREA 2. VERIFY OPERATIONAL PRIOR TO REMOVAL OF TEMPORARY CONSTRUCTION PARTITION.
3. DEMOLISH & REPLACE EXTERIOR WALL FINISH AT AREA 2. REPLACE WITH NEW WALL ASSEMBLY.
4. DEMOLISH REMAINING ROOFING AT AREA 2
5. INSTALL NEW ROOF ASSEMBLY AT AREA 2
6. STRENGTHEN ROOF STRUCTURE IN AREA 2.

PHASE 4 - FLOOR PLAN

KEY SCOPE SUMMARY & CHRONOLOGY:

1. REMOVE TEMPORARY CONSTRUCTION PARTITION.
2. INSTALL NEW SERVER RACKS (OFCI).
3. COUNTY TO RE-CONNECT ALL COMMUNICATIONS EQUIPMENT AND ASSOCIATED CABLING.
4. INSTALL NEW GUTTERS & DOWNSPOUTS.
5. INSTALL NEW DATA CABLE TRAY OVER SERVER RACKS
6. COUNTY TO TRANSFER DATA CABLES TO NEW TRAY AND REMOVE EXISTING CABLE TRAY.

FINAL FLOOR PLAN

KEY FEATURES:

1. ONE CONTINUOUS SPACE WITH 2 AC UNITS (1 ACTIVE & 1 BACKUP)
2. NEW FIRE-RATED METAL DOOR
3. NEW CLASS-A METAL ROOF
4. NEW EXTERIOR WALL ASSEMBLY W/ GREATER FIRE RESISTANCE THAN ORIGINAL ASSEMBLY.
5. NEW HVAC HEAT PUMPS W/ CMU PROTECTION WALL
6. NEW SERVER RACKS
7. NEW CABLE TRAY MOUNTED TO SERVER RACKS FOR ADDED STABILIZATION.

CONSTRUCTION PHASING

AXIA ARCHITECTS
540 Mendocino Ave, Santa Rosa, CA 95401
707 542-6052
axiaarchitects.com

ARCHITECT:

CONSULTANT:

SONOMA COUNTY PUBLIC INFRASTRUCTURE

PINE MOUNTAIN ANTENNA COMMUNICATIONS BUILDING RECONSTRUCTION

33550 PINE MOUNTAIN RD., CLOVERDALE, CA 95425 APN: 117-240-051

SEAL:

Date Stamped: 4/7/2025 Permit # BLD24-0145-R01 Plans Examiner: Ronald Morris
REVIEWED FOR CODE COMPLIANCE - PERMIT SONOMA

SHEET LOG

REV #	DATE:	ISSUED FOR:
2	3/24/25	PERMIT RESUBMITTAL

JOB NUMBER: 1191

SHEET:

G2

CONSTRUCTION PHASING DIAGRAMS

ORIGINAL DATE: 03/24/25

© AXIA ARCHITECTS

KEYNOTES

G00.01	(E) PG&E POWER POLE WITH POLE MOUNTED TRANSFORMER, TO REMAIN
G00.02	(E) CATTLE FENCE, PLACEMENT ASSUMED TO BE ON PROPERTY BOUNDARY
G00.03	(E) 60'± TALL ANTENNA ON EXISTING STRUCTURAL CONCRETE PAD, TO REMAIN
G00.05	(E) 6' CHAIN LINK FENCE, EXTENT OF LEASED PROPERTY BY COUNTY, TO REMAIN
G00.10	APPROXIMATE EDGE OF (E) DIRT DRIVEWAY, ± 10' WIDE
G00.12	(E) MANUAL CHAIN LINK SWING GATE W/ CHAIN LOCK, TO REMAIN
G00.13	(E) 20' WIDE AC PAVED COUNTY ROAD

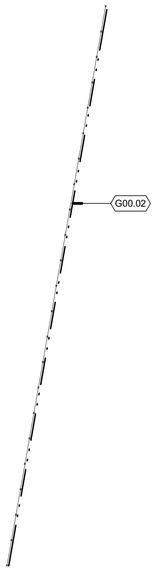

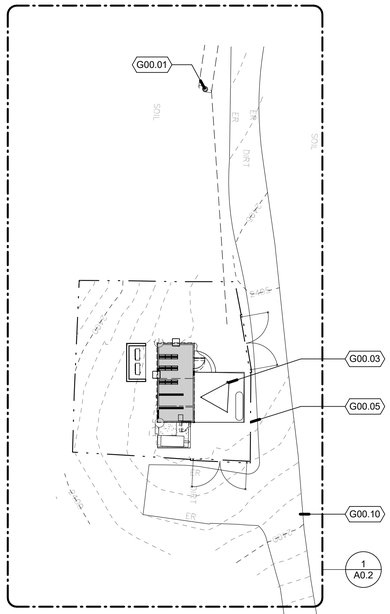

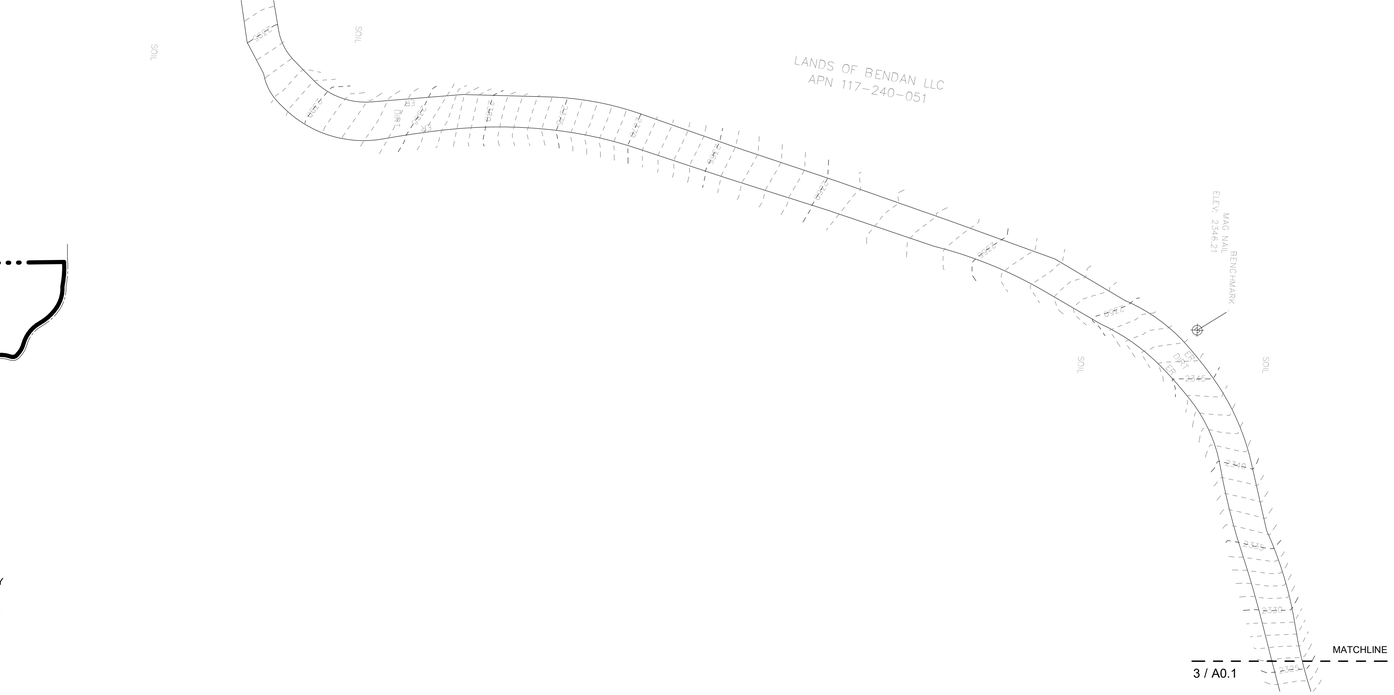

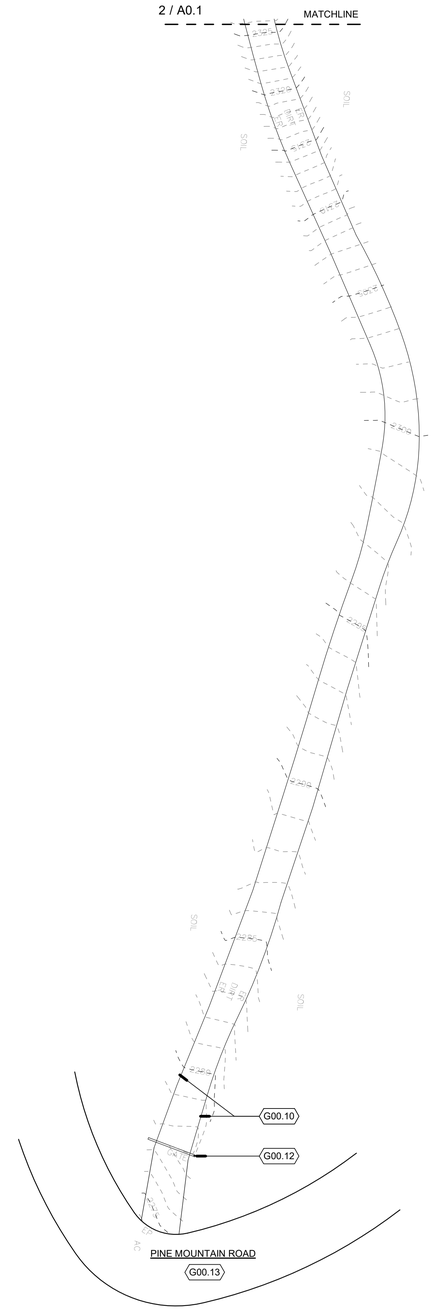

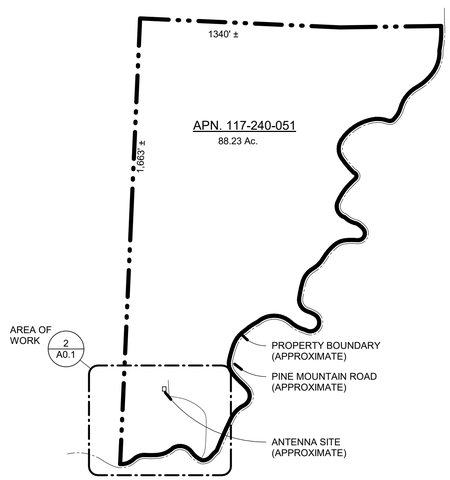

1 A0.1 PROPERTY BOUNDARY DIAGRAM
NO SCALE

2 A0.1 SITE PLAN
1" = 20'-0"

3 A0.1 SITE PLAN - CONTINUATION
1" = 20'-0"

ARCHITECT:
AXIA ARCHITECTS
540 Mendocino Ave, Santa Rosa, CA 95401
707 542-4652
axiaarchitects.com

CONSULTANT:

SONOMA COUNTY PUBLIC INFRASTRUCTURE

PINE MOUNTAIN ANTENNA COMMUNICATIONS BUILDING RECONSTRUCTION

33550 PINE MOUNTAIN RD., CLOVERDALE, CA 95425 APN: 117-240-051

SEAL:

Date Stamped: 4/7/2025 Permit #: BLD24-1455 R01 Plans Examiner: Ronald Morris
REVIEWED FOR CODE COMPLIANCE - PERMIT SONOMA

SHEET LOG

REV #	DATE:	ISSUED FOR:

JOB NUMBER: 1191

SHEET:

A0.1

SITE PLAN

ORIGINAL DATE: 03/24/25

© AXIA ARCHITECTS

3/24/2025 3:16:03 PM C:\Users\dhilberman\Documents\1191 Pine Mtn Rd Comm Vault_C_V25_dhilberman@axiaarchitects.com.rvt

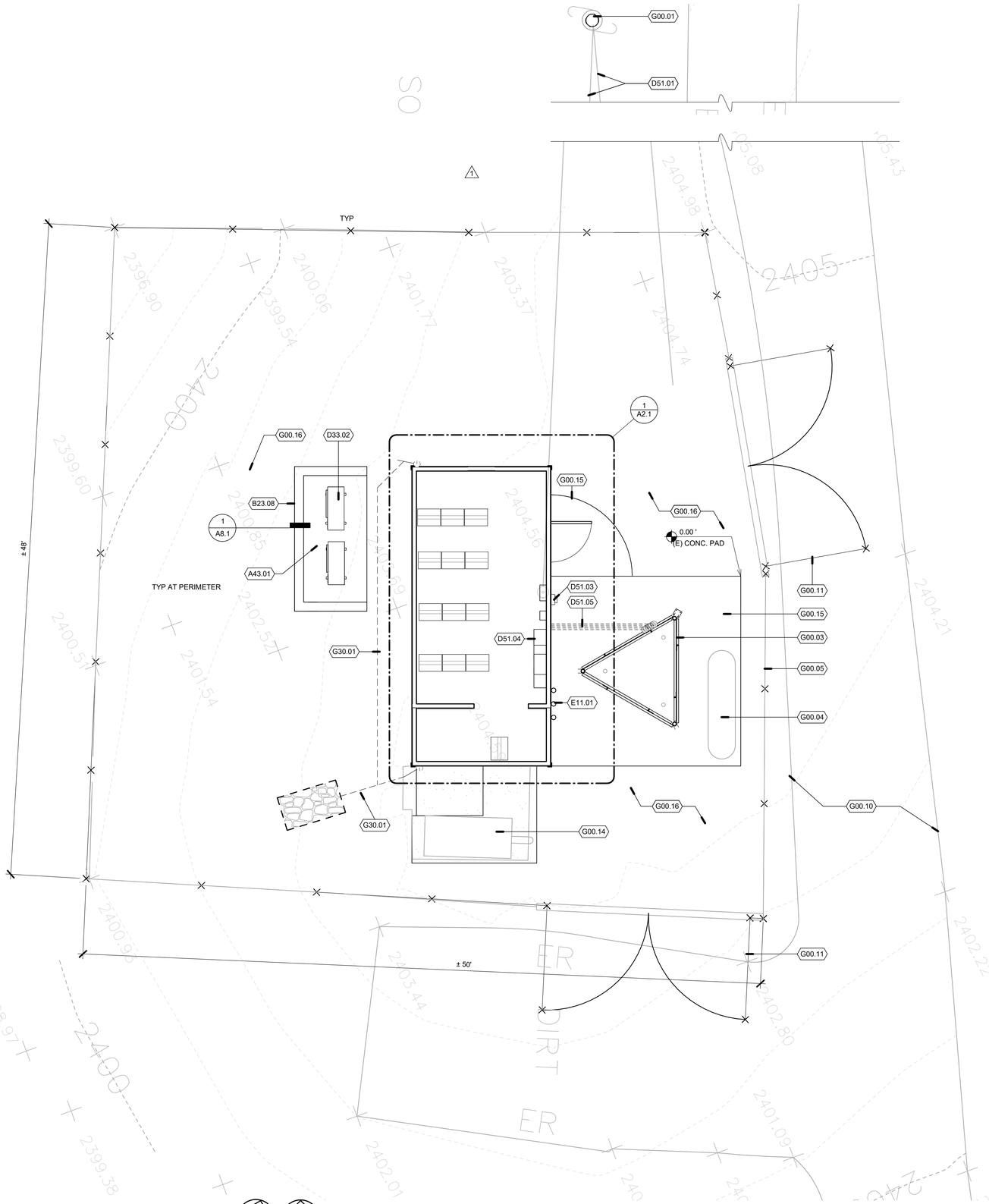

1 A0.2 **ENLARGED SITE PLAN**
1/4" = 1'-0"

TRUE NORTH PROJECT NORTH

SITE PLAN GENERAL NOTES

1. SCOPE DESCRIBED IS FOR COMPLETE PROJECT. CONTRACTOR SHALL REFER TO SHEET G2 AND COORDINATE WITH OWNER TO SEGMENT TIMING AND SEQUENCING OF WORK.
2. TOPOGRAPHIC AND REFERENCE LOCATIONS ARE BASED ON SITE SURVEY DATED "01/17/22" PREPARED BY: BKF ENGINEERS; 1646 N. CALIFORNIA BLVD. SUITE 400 WALNUT CREEK, CA 94596
3. FINISHED FLOOR ELEVATIONS INDICATED ARE FOR BUILDING(S) ONLY. REFER TO CIVIL ENGINEERING DRAWINGS FOR ELEVATIONS RELATIVE TO THE REST OF THE SITE AND FOR SITE FEATURES NOT OTHERWISE INDICATED.
4. REFER TO MECHANICAL AND ELECTRICAL DRAWINGS FOR SITE FEATURES NOT OTHERWISE SHOWN.
5. EXTERIOR CONCRETE FLATWORK: MAXIMUM SLOPE OF 1:20, UNO; EXTERIOR DOOR LANDINGS SHALL SLOPE 1/4" PER FOOT MAXIMUM FOR DRAINAGE. CONCRETE SHALL SLOPE MINIMUM 1/8" PER FOOT AWAY FROM BUILDINGS.
6. NEATLY CUT AND REMOVE SURFACES AND FINISHES AS REQUIRED OR TO A NATURAL POINT OF DIVISION TO ENABLE INSTALLATION OF UTILITIES OR OTHER CONCEALED WORK, WHETHER SPECIFICALLY SHOWN OR INFERRED FOR SUPPORT OR RENOVATION. REFER TO CIVIL STRUCTURAL, MECHANICAL, PLUMBING, ELECTRICAL, AND LANDSCAPE DRAWINGS FOR CONCEALED WORK NOT SHOWN ON ARCHITECTURAL DRAWINGS.
7. REPAIR AND REPLACE ALL EXISTING SURFACES AND FINISHES TO MATCH EXISTING UNDISTURBED WORK.
8. FINAL GRADE: RAKE SMOOTH TO ONE-TENTH FOOT TOLERANCE. ALLOW FOR TOPSOIL PLACEMENT, IRRIGATION SLEEVE PLACEMENT AND LANDSCAPE PLANTING.
9. EXCAVATIONS: BACKFILL AND COMPACT PROMPTLY AS WORK PROGRESSES. MINIMIZE OPEN TRENCHES.

EROSION CONTROL

1. PERFORM EROSION PREVENTION AND SEDIMENT CONTROL IN ACCORDANCE WITH THE LATEST EDITION OF APPENDIX CHAPTER 33 OF THE CALIFORNIA BUILDING CODE, APPLICABLE SONOMA COUNTY REGULATIONS, AND SECTION 20 OF THE CALTRANS STANDARD SPECIFICATIONS.
2. THE APPROVED PLANS SHALL CONFORM WITH THE EROSION PREVENTION AND SEDIMENT CONTROL BEST MANAGEMENT PRACTICES CONTAINED IN THE LATEST EDITIONS OF THE FOLLOWING PUBLICATIONS OR AN EQUIVALENT BEST MANAGEMENT PRACTICE:
   A. EROSION AND SEDIMENT CONTROL FIELD MANUAL BY THE SAN FRANCISCO BAY REGIONAL WATER QUALITY CONTROL BOARD.
   B. MANUAL OF STANDARDS FOR EROSION & SEDIMENT CONTROL MEASURES BY THE ASSOCIATION OF BAY AREA GOVERNMENTS.
   C. STORMWATER BEST MANAGEMENT PRACTICE HANDBOOK BY THE CALIFORNIA STORMWATER QUALITY ASSOCIATION.
3. IF DISCREPANCIES OCCUR BETWEEN THESE NOTES, MATERIAL REFERENCED HEREIN OR MANUFACTURER'S RECOMMENDATIONS, THEN THE MOST PROTECTIVE SHALL APPLY.
4. THE OWNER IS RESPONSIBLE FOR PREVENTING STORM WATER POLLUTION GENERATED FROM THE CONSTRUCTION SITE YEAR-ROUND. THE OWNER MUST IMPLEMENT AN EFFECTIVE COMBINATION OF EROSION PREVENTION AND SEDIMENT CONTROL ON ALL DISTURBED AREAS DURING THE RAINY SEASON (OCTOBER 15 - APRIL 15).
5. CHANGES TO THE EROSION PREVENTION AND SEDIMENT CONTROL PLAN MAY BE MADE TO RESPOND TO FIELD CONDITIONS. CHANGES SHALL BE NOTED ON THE PLAN WHEN MADE.
6. EXPOSED SLOPES SHALL BE PROTECTED BY USING EROSION PREVENTION MEASURES TO THE MAXIMUM EXTENT PRACTICABLE, SUCH AS ESTABLISHING 70% VEGETATION COVERAGE, HYDROSEEDING, STRAW MULCH, GEOTEXTILES, PLASTIC COVERS, BLANKETS OR MATS.
7. WHENEVER IT IS NOT POSSIBLE TO UTILIZE EROSION PREVENTION MEASURES, EXPOSED SLOPE SHALL EMPLOY SEDIMENT CONTROL DEVICES, SUCH AS FIBER ROLLS AND SILT FENCES. FIBER ROLLS AND SILT FENCES SHALL BE TRENCHED AND KEYED INTO THE SOIL AND INSTALLED ON CONTOUR. SILT FENCES SHALL BE INSTALLED APPROXIMATELY 2 TO 5 FEET FROM THE TOE OF SLOPE.
8. ENERGY DISSIPATERS SHALL BE INSTALLED AT STORM DRAIN OUTLETS WHICH MAY CONVEY STORM WATER FLOW LEADING TO SOIL EROSION.
9. SOIL AND MATERIAL STOCKPILES SHALL BE PROPERLY PROTECTED TO MINIMIZE SEDIMENT AND POLLUTANT TRANSPORT FROM THE CONSTRUCTION SITE.
10. SOLID WASTE, SUCH AS TRASH, DISCARDED BUILDING MATERIALS AND DEBRIS, SHALL BE PLACED IN DESIGNATED COLLECTION AREAS OR CONTAINERS. THE CONSTRUCTION SITE SHALL BE CLEARED OF SOLID WASTE DAILY, OR NECESSARY AND REGULAR REMOVAL AND PROPER DISPOSAL SHALL BE ARRANGED.

KEYNOTES

A43.01	CONCRETE SLAB, SSD
B23.08	(N) CMU WALL AT HEAT-PUMP SLAB
D33.02	INSTALL GROUND-MOUNTED HEAT PUMP UNIT, SMD
D51.01	(E) OVERHEAD POWER LINE TO REMAIN. COORDINATE POWER SHUTDOWN WITH OWNER. PROTECT DURING CONSTRUCTION.
D51.03	(E) ELECTRICAL SERVICE METER AND SERVICE DROP ABOVE. PROTECT DURING CONSTRUCTION.
D51.04	(E) WALL MOUNTED GENERATOR ATS, TO REMAIN. PROTECT DURING CONSTRUCTION; TYP.
D51.05	(E) TELECOM AND DATA CABLING TO BE REMAIN
E11.01	(E) EQUIPMENT MASTS AND SENSORS SURFACE MOUNTED TO (E) VAULT EXTERIOR WALL. PROTECT DURING CONSTRUCTION
G00.01	(E) PG&E POWER POLE WITH POLE MOUNTED TRANSFORMER, TO REMAIN
G00.03	(E) 60'± TALL ANTENNA ON EXISTING STRUCTURAL CONCRETE PAD, TO REMAIN
G00.04	(E) PROPANE TANK SEISMICALLY ANCHORED TO EXISTING STRUCTURAL CONCRETE PAD, TO REMAIN
G00.05	(E) 6' CHAIN LINK FENCE, EXTENT OF LEASED PROPERTY BY COUNTY, TO REMAIN
G00.10	APPROXIMATE EDGE OF (E) DIRT DRIVEWAY, ± 10' WIDE
G00.11	(E) CHAIN LINK SWING GATE, TO REMAIN
G00.14	(E) GENERATOR ON CONCRETE PAD, TO REMAIN
G00.15	(E) CONCRETE SLAB, TO REMAIN, TYP UNO
G00.16	(E) COMPACT EXPOSED EARTH, TYPICAL U.N.O
G30.01	NEW 3" DIAMETER HDPE STORM DRAINAGE LINE SET 18" BELOW GRADE SLOPED TO OUTLET AT RIP RAP. BACKFILL TRENCH WITH SOIL - PEA GRAVEL TO 95% COMPACTION.

ARCHITECT:
AXIA ARCHITECTS
540 Mendocino Ave, Santa Rosa, CA 95401
707 542 4652
axiaarchitects.com

CONSULTANT:

SONOMA COUNTY PUBLIC INFRASTRUCTURE

PINE MOUNTAIN ANTENNA COMMUNICATIONS BUILDING RECONSTRUCTION

33550 PINE MOUNTAIN RD., CLOVERDALE, CA 95425 APN: 117-240-051

SEAL:

Date Stamped: 4/7/2025 Permit #: BLD-25-0025 R01 Plans Examiner: Ronald Morris
REVIEWED FOR CODE COMPLIANCE - PERMIT SONOMA

SHEET LOG

REV #	DATE:	ISSUED FOR:
1	09/19/24	ADDENDUM 01

JOB NUMBER: 1191

SHEET:

A0.2

ENLARGED SITE PLAN

ORIGINAL DATE: 03/24/25

© AXIA ARCHITECTS

3/24/2025 3:16:11 PM C:\Users\dhilberman\Documents\1191 Pine Mtn Rd Comm Vault_C_V25_dhilberman@axiaarchitects.com.rvt

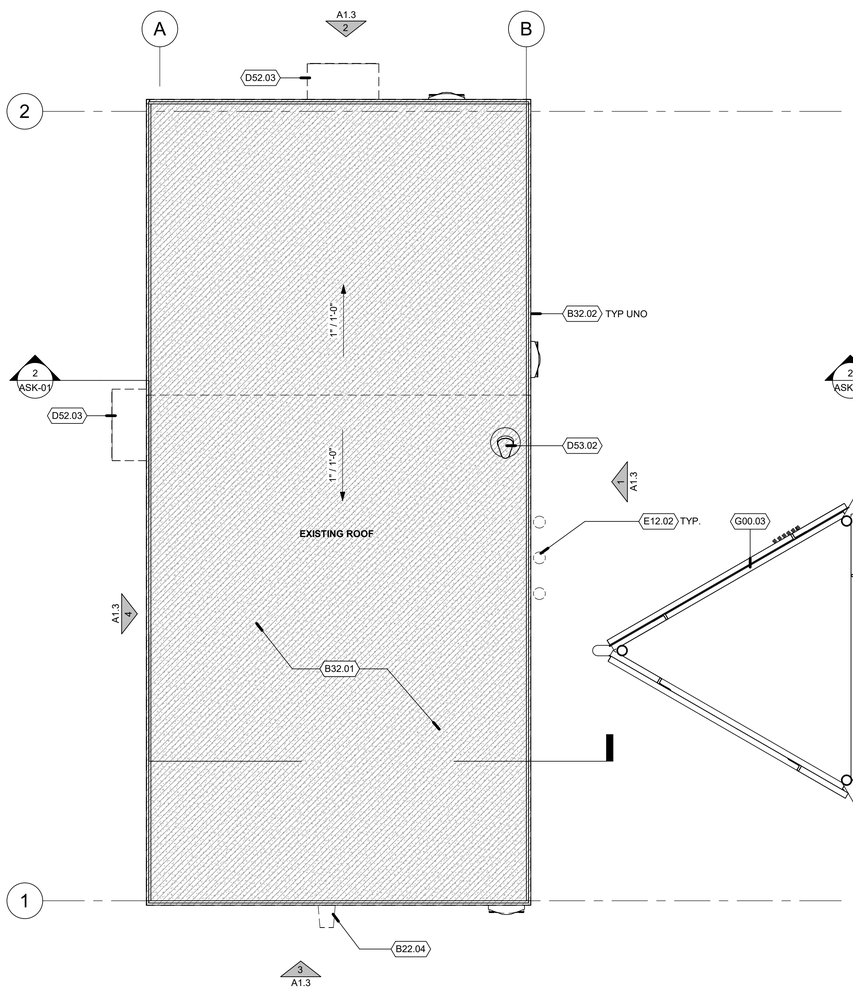

2 A1.1 DEMOLITION ROOF PLAN

1/2" = 1'-0"

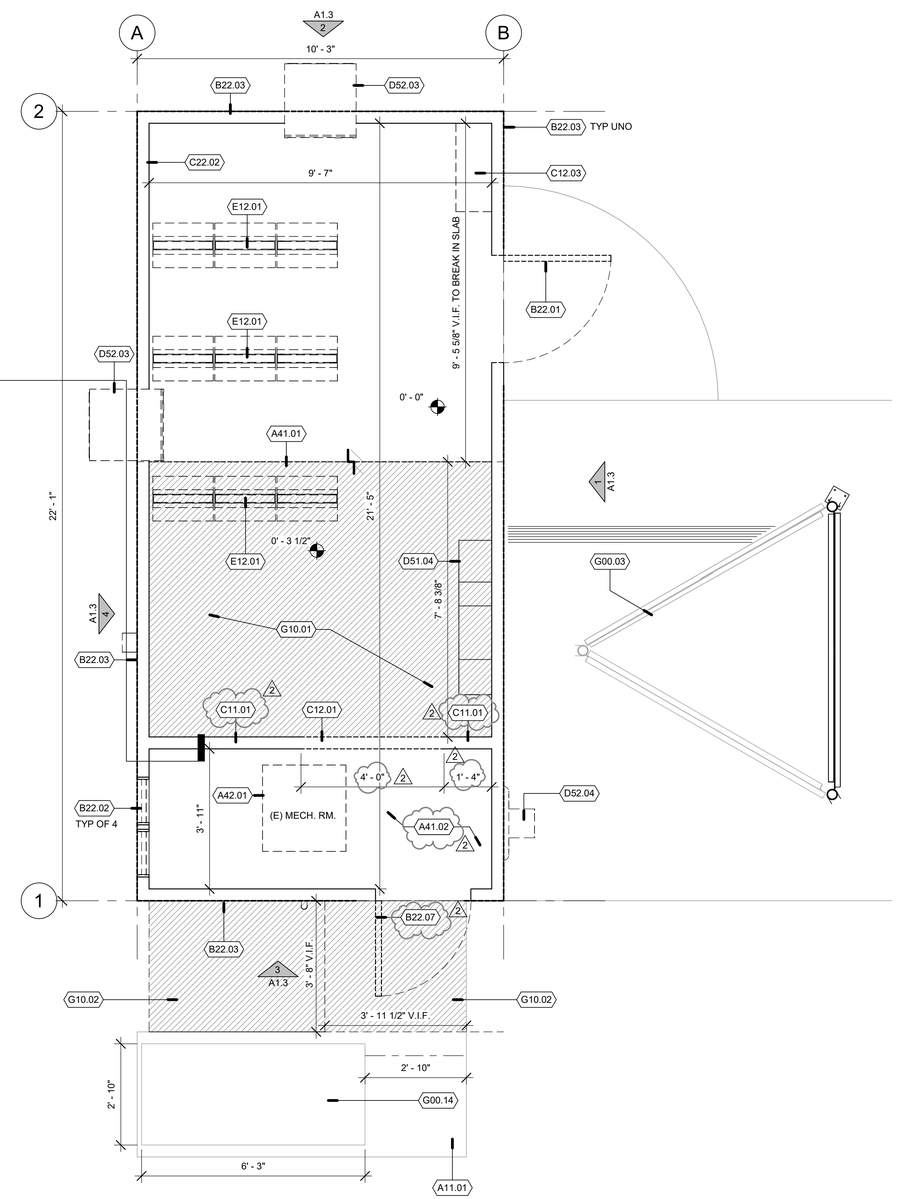

1 A1.1 DEMOLITION FLOOR PLAN

1/2" = 1'-0"

GENERAL DEMOLITION NOTES

1. SCOPE DESCRIBED IS FOR COMPLETE PROJECT. CONTRACTOR SHALL REFER TO SHEET G2 AND COORDINATE WITH OWNER TO SEGMENT TIMING AND SEQUENCING OF WORK.
2. DEMOLITION DRAWINGS ARE SCHEMATIC. REMOVE ALL WORK AS INDICATED AND AS REQUIRED TO COMPLETE NEW CONSTRUCTION AS INDICATED. REFER TO CIVIL, LANDSCAPE, STRUCTURAL, MECHANICAL, PLUMBING AND ELECTRICAL DRAWINGS FOR FEATURES AND CONCEALED WORK NOT OTHERWISE SHOWN ON ARCHITECTURAL DRAWINGS.
3. SEE STRUCTURAL DRAWING FOR DEMOLITION OF STRUCTURE NOT OTHERWISE INDICATED, INCLUDING SHEAR WALLS, INTERIOR PARTITIONS, INTERIOR TRENCHES FOR INSTALLATION OF UNDERGROUND UTILITIES.
4. SEE MECHANICAL, PLUMBING, AND ELECTRICAL DRAWINGS FOR DEMOLITION OF ITEMS NOT OTHERWISE INDICATED, INCLUDING UNDERGROUND OR CONCEALED UTILITIES AND SERVICES.
5. NOTIFY LOCAL AGENCY HAVING JURISDICTION PRIOR TO STARTING DEMOLITION WORK. COMPLY WITH ALL AGENCY REQUIREMENTS.
6. OWNER WILL REMOVE FURNITURE, STORED MATERIALS AND MOVABLE EQUIPMENT IN THE AREA OF WORK PRIOR TO START OF DEMOLITION, UNLESS OTHERWISE NOTED.
7. VERIFY EXISTING CONDITIONS AND INVERT ELEVATIONS OF UNDERGROUND UTILITIES PRIOR TO DEMOLITION. NOTIFY ARCHITECT OF DISCREPANCIES AND REQUEST DIRECTION.
8. DRAWINGS ARE PREPARED FROM INFORMATION MADE AVAILABLE BY THE OWNER AND ARE NOT A GUARANTEE OF EXISTING OR CONCEALED CONDITIONS.
9. PROVIDE ALL SHORING, BRACING AND SUPPORTS REQUIRED TO PREVENT SETTLEMENT OR DISPLACEMENT.
10. DISCONNECT ALL AFFECTED UTILITIES PRIOR TO STARTING DEMOLITION WORK.
11. NEATLY CUT AND REMOVE SURFACES AND FINISHES AS REQUIRED OR TO A NATURAL POINT OF DIVISION TO ENABLE INSTALLATION OF UTILITIES OR OTHER CONCEALED WORK, WHETHER SPECIFICALLY SHOWN OR INFERRED FOR SUPPORT OR RENOVATION.
12. PROTECT EXISTING WORK DESIGNATED TO REMAIN FROM DAMAGE DUE TO DEMOLITION AND RECONSTRUCTION WORK.
13. REPAIR AND REPLACE ALL EXISTING SURFACES AND FINISHES TO MATCH EXISTING UNDISTURBED WORK.
14. CAP ALL ABANDONED UTILITIES BEHIND FACE OF NEW FINISHES, INCLUDING FINISH GRADE OR PAVING, RECORD ALL LOCATIONS ON RECORD DOCUMENTS.
15. ALL DEMOLISHED MATERIALS ARE THE PROPERTY OF THE CONTRACTOR, EXCEPT FOR SUCH ITEMS AS THE OWNER WISHES TO CLAIM. STOCKPILE THESE ITEMS ON THE SITE AS DIRECTED BY THE OWNER.
16. REMOVE DEMOLISHED MATERIALS FROM SITE AND DISPOSE OF IN A LEGAL MANNER.
17. REMOVE ALL EXISTING NAILS, TACKS, STAPLES, HANGER WIRES, SIGNAL WIRES, CABLES AND SIMILAR ITEMS FROM SURFACES TO REMAIN. PREPARE ALL REMAINING SURFACES / SUBSTRATE TO RECEIVE INDICATED FINISHES.
18. REMOVE AND STORE DESIGNATED EQUIPMENT / MATERIALS FOR RE-INSTALLATION AS INDICATED.
19. SELECTIVE DEMOLITION INDICATED IN THESE CONTRACT DOCUMENTS EXCLUDES REMOVAL OF HAZARDOUS MATERIALS AND TOXIC SUBSTANCES.
20. IF HAZARDOUS MATERIALS ARE DISCOVERED OR SUSPECTED DURING DEMOLITION OPERATIONS, STOP WORK AND NOTIFY OWNER'S REPRESENTATIVE FOR INSTRUCTIONS IMMEDIATELY. TAKE MEASURES TO PROTECT WORKERS AND PUBLIC. DIRECT ALL QUESTIONS ABOUT HAZARDOUS MATERIALS TO THE OWNER'S REPRESENTATIVE.
21. COORDINATE DEMOLITION WITH WORK OF HAZARDOUS MATERIAL ABATEMENT WORK AS DIRECTED BY OWNER.

KEYNOTES

A11.01	(E) CONCRETE SLAB TO REMAIN
A41.01	APPROXIMATE LINE OF 3 1/2" ELEVATION CHANGE BETWEEN EXISTING CONCRETE SLABS.
A41.02	EXISTING CONCRETE SLAB TO REMAIN. STABILIZE BENEATH SLAB WITH PRESSURIZED GEO-GROUT. VERIFY CONCRETE BOND BEAM IS IN PLACE PRIOR TO GEO-GROUT INJECTION.
A42.01	DEMOLISH (E) 8" THICK CONCRETE PAD ON TOP OF SLAB
B22.01	DEMOLISH & REMOVE (E) DOOR; PREPARE FOR (N) DOOR.
B22.02	DEMOLISH (E) LOUVERED VENTS; PREPARE OPENING FOR (N) WORK
B22.03	REMOVE (E) T-111 SIDING; PREPARE WALL FOR NEW EXTERIOR FINISH.
B22.04	DEMOLISH (E) METAL VENT; PREPARE OPENING FOR NEW EXTERIOR FINISH
B22.07	DEMOLISH AND REMOVE (E) DOOR. INFILL FRAME OPENING TO MATCH ADJACENT WALL
B32.01	REMOVE (E) EXTERIOR ROOFING DOWN TO PLYWOOD SUBSTRATE; PREPARE FOR NEW WORK
B32.02	REMOVE (E) FLASHINGS AND FASCIA TRIM BOARDS
C11.01	PORTION OF EXISTING STACKED 2X4 WALL TO REMAIN
C12.01	DEMOLISH PORTION OF (E) INTERIOR PARTITION; REF. CONSTRUCTION PHASING DIAGRAM.
C12.03	DEMOLISH / REMOVE (E) SHELF UNIT
C22.02	DEMOLISH / REMOVE (E) GYP. WALL SURFACES AT INTERIOR
D51.04	(E) WALL MOUNTED GENERATOR ATS, TO REMAIN. PROTECT DURING CONSTRUCTION; TYP.
D52.03	REMOVE (E) THRU-WALL AC UNIT
D52.04	REMOVE (E) VENTILATION FAN AND LOUVERS
D53.02	(E) ELECTRICAL SERVICE DROP MAST, SED. TEMPORARILY DISCONNECT SUPPORT RODS DURING CONSTRUCTION. COORDINATE SHUTDOWN WITH OWNER.
E12.01	OWNER TO DISMANTLE (E) EQUIPMENT AND RELOCATE DURING CONSTRUCTION. SEE CONSTRUCTION PHASING DIAGRAM FOR LOCATION INFORMATION.
E12.02	(E) EQUIPMENT MASTS AND SENSORS SURFACE MOUNTED TO (E) VAULT EXTERIOR WALL TO REMAIN; TYP. U.N.O.
G00.03	(E) 60'± TALL ANTENNA ON EXISTING STRUCTURAL CONCRETE PAD, TO REMAIN
G00.14	(E) GENERATOR ON CONCRETE PAD, TO REMAIN
G10.01	DEMOLISH (E) CONCRETE SLAB
G10.02	SAW CUT AND REPLACE (E) CONCRETE SLAB

ARCHITECT:
AXIA ARCHITECTS
540 Mendocino Ave, Santa Rosa, CA 95401
707 542-4652
axiaarchitects.com

CONSULTANT:

SONOMA COUNTY PUBLIC INFRASTRUCTURE

PINE MOUNTAIN ANTENNA COMMUNICATIONS BUILDING RECONSTRUCTION

33550 PINE MOUNTAIN RD., CLOVERDALE, CA 95425 APN: 117-240-051

SEAL:

Date Stamped: 4/7/2025 Permit # BL-24-2425-R01 Plans Examiner: Ronald Morris
REVIEWED FOR CODE COMPLIANCE - PERMIT SONOMA

SHEET LOG

REV #	DATE:	ISSUED FOR:
2	3/24/25	PERMIT RESUBMITTAL

JOB NUMBER: 1191

SHEET:

A1.1

EXISTING / DEMOLITION FLOOR PLAN & ROOF PLAN

ORIGINAL DATE: 03/24/25

© AXIA ARCHITECTS

3/24/2025 3:16:24 PM C:\Users\dhilbeman\Documents\1191 Pine Mtn Rd Comm Vault_C_V25_dhilbeman@axiaarchitects.com.rvt

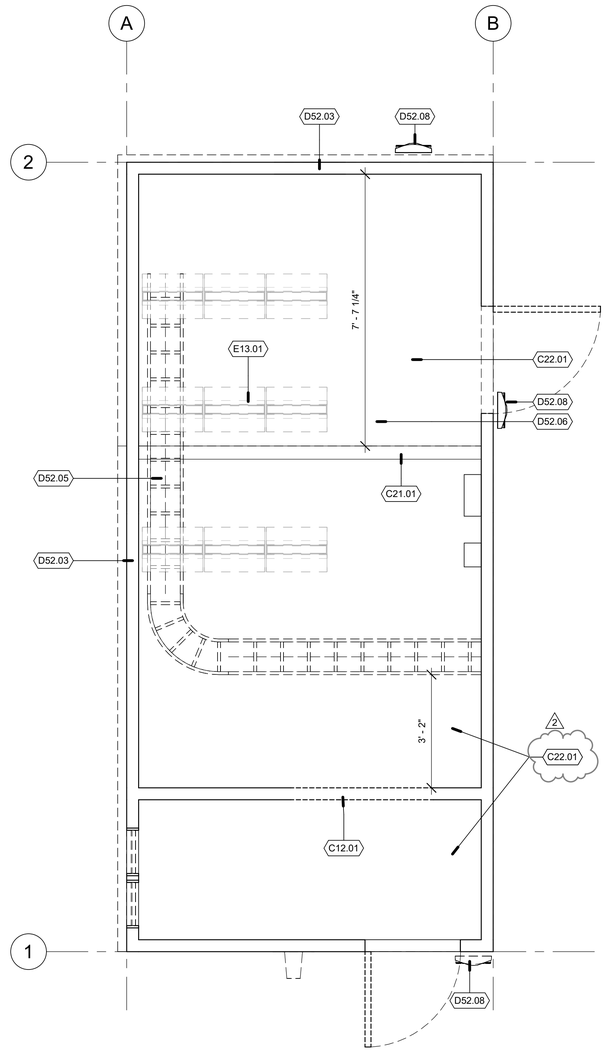

1 A1.2 **(D) REFLECTED CEILING PLAN**
1/2" = 1'-0"

NORTH

GENERAL DEMOLITION NOTES

1. SCOPE DESCRIBED IS FOR COMPLETE PROJECT. CONTRACTOR SHALL REFER TO SHEET G2 AND COORDINATE WITH OWNER TO SEGMENT TIMING AND SEQUENCING OF WORK.
2. DEMOLITION DRAWINGS ARE SCHEMATIC. REMOVE ALL WORK AS INDICATED AND AS REQUIRED TO COMPLETE NEW CONSTRUCTION AS INDICATED. REFER TO CIVIL, LANDSCAPE, STRUCTURAL, MECHANICAL, PLUMBING AND ELECTRICAL DRAWINGS FOR FEATURES AND CONCEALED WORK NOT OTHERWISE SHOWN ON ARCHITECTURAL DRAWINGS.
3. SEE STRUCTURAL DRAWING FOR DEMOLITION OF STRUCTURE NOT OTHERWISE INDICATED, INCLUDING SHEAR WALLS, INTERIOR PARTITIONS, INTERIOR TRENCHES FOR INSTALLATION OF UNDERGROUND UTILITIES.
4. SEE MECHANICAL, PLUMBING, AND ELECTRICAL DRAWINGS FOR DEMOLITION OF ITEMS NOT OTHERWISE INDICATED, INCLUDING UNDERGROUND OR CONCEALED UTILITIES AND SERVICES.
5. NOTIFY LOCAL AGENCY HAVING JURISDICTION PRIOR TO STARTING DEMOLITION WORK. COMPLY WITH ALL AGENCY REQUIREMENTS.
6. OWNER WILL REMOVE FURNITURE, STORED MATERIALS AND MOVABLE EQUIPMENT IN THE AREA OF WORK PRIOR TO START OF DEMOLITION, UNLESS OTHERWISE NOTED.
7. VERIFY EXISTING CONDITIONS AND INVERT ELEVATIONS OF UNDERGROUND UTILITIES PRIOR TO DEMOLITION. NOTIFY ARCHITECT OF DISCREPANCIES AND REQUEST DIRECTION.
8. DRAWINGS ARE PREPARED FROM INFORMATION MADE AVAILABLE BY THE OWNER AND ARE NOT A GUARANTEE OF EXISTING OR CONCEALED CONDITIONS.
9. PROVIDE ALL SHORING, BRACING AND SUPPORTS REQUIRED TO PREVENT SETTLEMENT OR DISPLACEMENT.
10. DISCONNECT ALL AFFECTED UTILITIES PRIOR TO STARTING DEMOLITION WORK.
11. NEATLY CUT AND REMOVE SURFACES AND FINISHES AS REQUIRED OR TO A NATURAL POINT OF DIVISION TO ENABLE INSTALLATION OF UTILITIES OR OTHER CONCEALED WORK, WHETHER SPECIFICALLY SHOWN OR INFERRED FOR SUPPORT OR RENOVATION.
12. PROTECT EXISTING WORK DESIGNATED TO REMAIN FROM DAMAGE DUE TO DEMOLITION AND RECONSTRUCTION WORK.
13. REPAIR AND REPLACE ALL EXISTING SURFACES AND FINISHES TO MATCH EXISTING UNDISTURBED WORK.
14. CAP ALL ABANDONED UTILITIES BEHIND FACE OF NEW FINISHES, INCLUDING FINISH GRADE OR PAVING, RECORD ALL LOCATIONS ON RECORD DOCUMENTS.
15. ALL DEMOLISHED MATERIALS ARE THE PROPERTY OF THE CONTRACTOR, EXCEPT FOR SUCH ITEMS AS THE OWNER WISHES TO CLAIM. STOCKPILE THESE ITEMS ON THE SITE AS DIRECTED BY THE OWNER.
16. REMOVE DEMOLISHED MATERIALS FROM SITE AND DISPOSE OF IN A LEGAL MANNER.
17. REMOVE ALL EXISTING NAILS, TACKS, STAPLES, HANGER WIRES, SIGNAL WIRES, CABLES AND SIMILAR ITEMS FROM SURFACES TO REMAIN. PREPARE ALL REMAINING SURFACES / SUBSTRATE TO RECEIVE INDICATED FINISHES.
18. REMOVE AND STORE DESIGNATED EQUIPMENT / MATERIALS FOR RE-INSTALLATION AS INDICATED.
19. SELECTIVE DEMOLITION INDICATED IN THESE CONTRACT DOCUMENTS EXCLUDES REMOVAL OF HAZARDOUS MATERIALS AND TOXIC SUBSTANCES.
20. IF HAZARDOUS MATERIALS ARE DISCOVERED OR SUSPECTED DURING DEMOLITION OPERATIONS, STOP WORK AND NOTIFY OWNER'S REPRESENTATIVE FOR INSTRUCTIONS IMMEDIATELY. TAKE MEASURES TO PROTECT WORKERS AND PUBLIC. DIRECT ALL QUESTIONS ABOUT HAZARDOUS MATERIALS TO THE OWNER'S REPRESENTATIVE.
21. COORDINATE DEMOLITION WITH WORK OF HAZARDOUS MATERIAL ABATEMENT WORK AS DIRECTED BY OWNER.

KEYNOTES

C12.01	DEMOLISH PORTION OF (E) INTERIOR PARTITION; REF. CONSTRUCTION PHASING DIAGRAM.
C21.01	(E) RIDGE BEAM TO REMAIN
C22.01	DEMOLISH / REMOVE (E) GYP. CEILING; SEE STRUCTURAL DRAWINGS FOR STRUCTURAL MODIFICATIONS (2)
D52.03	REMOVE (E) THRU-WALL AC UNIT
D52.05	LOWER (E) CABLE TRAY PRIOR TO CONSTRUCTION. REMOVE ONCE (N) UNISTRUT-MOUNTED CENTER CABLE TRAY IS COMPLETED. COUNTY TO DISMANTLE (E) CABLING & RELOCATE TO (N) TRAY.
D52.06	REMOVE (E) LIGHTING; TYP.
D52.08	TEMPORARILY DISCONNECT (E) EXTERIOR LIGHTING DURING CONSTRUCTION. RE-USE AND RE-INSTALL (E) LUMINAIRE.
E13.01	EQUIPMENT RACKS, OFOI

ARCHITECT:
AXIA ARCHITECTS
540 Mendocino Ave, Santa Rosa, CA 95401
707 542-4652
axiaarchitects.com

CONSULTANT:

SONOMA COUNTY PUBLIC INFRASTRUCTURE

PINE MOUNTAIN ANTENNA COMMUNICATIONS BUILDING RECONSTRUCTION

33550 PINE MOUNTAIN RD., CLOVERDALE, CA 95425 APN: 117-240-051

SEAL:

Date Sealed: 4/7/2025 Permit # BLD24-0425 R01 Plans Examiner: Ronald Morris
REVIEWED FOR CODE COMPLIANCE - PERMIT SONOMA

SHEET LOG

REV #	DATE:	ISSUED FOR:
2	3/24/25	PERMIT RESUBMITTAL

JOB NUMBER: 1191

SHEET:

A1.2

EXISTING / DEMOLITION REFLECTED CEILING PLAN

ORIGINAL DATE: 03/24/25

© AXIA ARCHITECTS

3/24/2025 3:16:33 PM C:\Users\dhilbeman\Documents\1191 Pine Mtn Rd Comm Vault_C_V25_dhilbeman@axiaarchitects.com.rvt

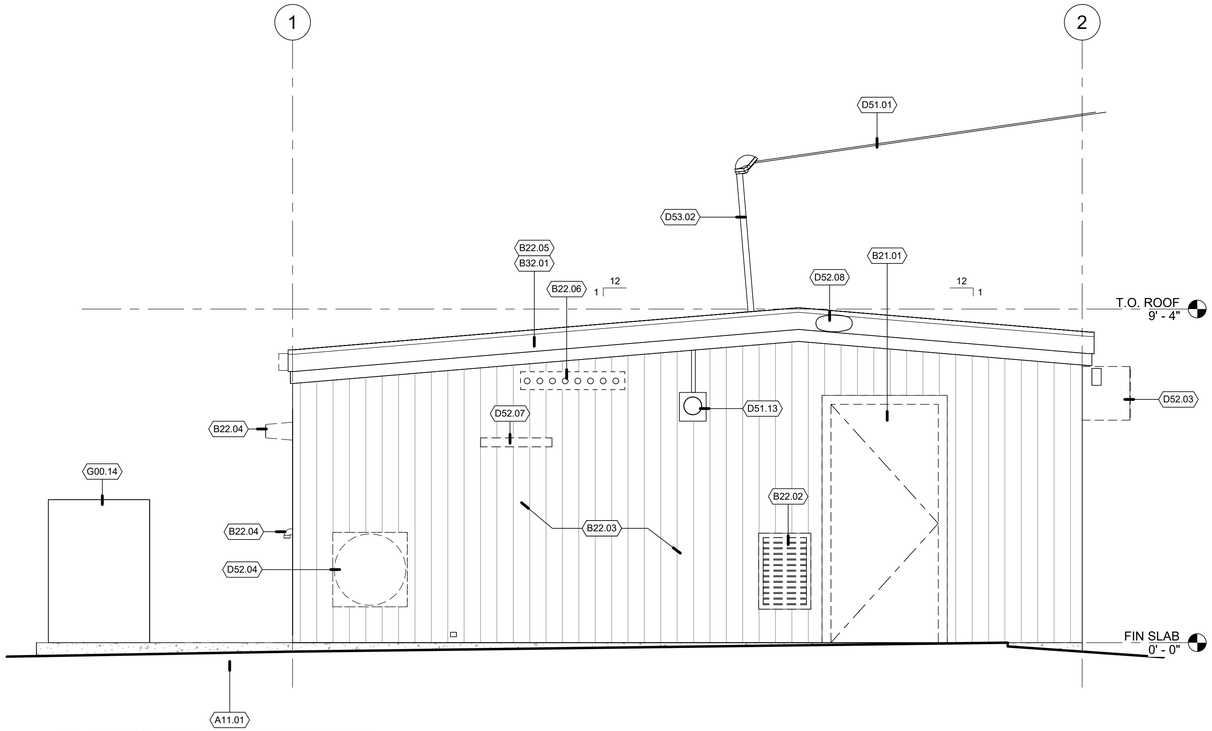

1 DEMOLITION EAST ELEVATION
A1.3 1/2" = 1'-0"

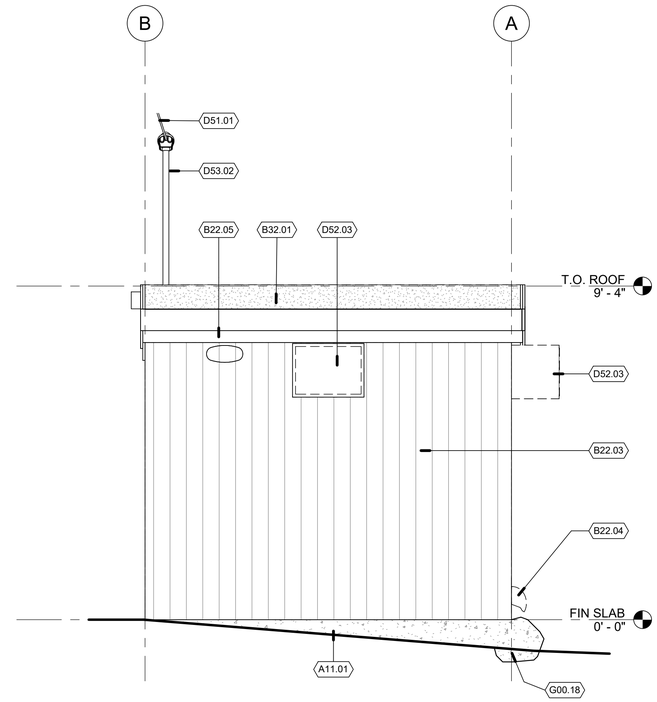

2 DEMOLITION NORTH ELEVATION
A1.3 1/2" = 1'-0"

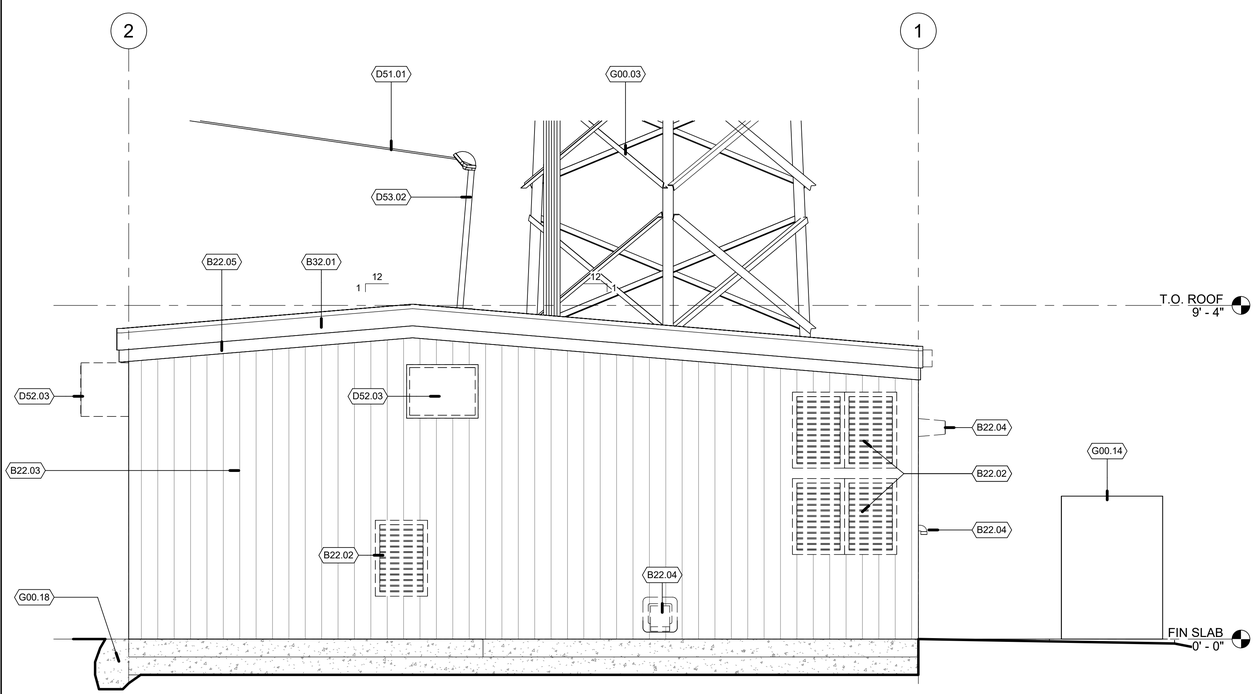

4 DEMOLITION WEST ELEVATION
A1.3 1/2" = 1'-0"

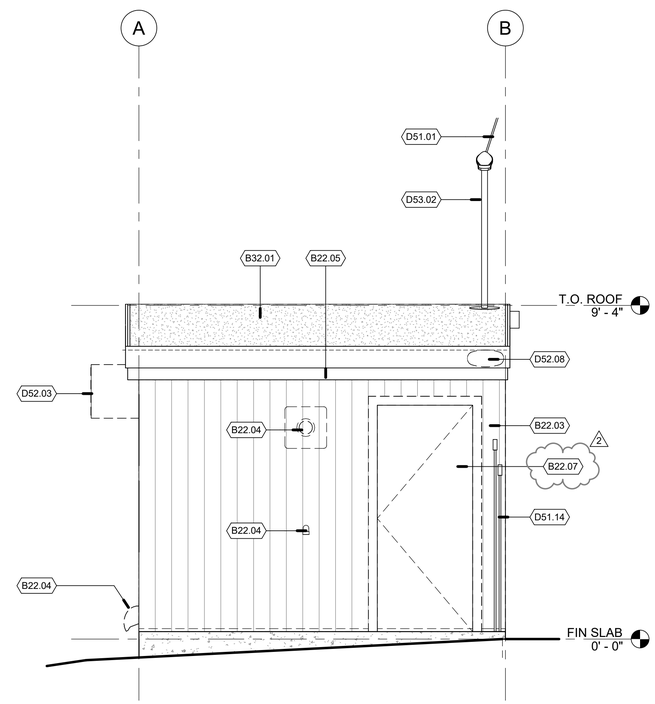

3 DEMOLITION SOUTH ELEVATION
A1.3 1/2" = 1'-0"

GENERAL DEMOLITION NOTES

1. SCOPE DESCRIBED IS FOR COMPLETE PROJECT. CONTRACTOR SHALL REFER TO SHEET G2 AND COORDINATE WITH OWNER TO SEGMENT TIMING AND SEQUENCING OF WORK.
2. DEMOLITION DRAWINGS ARE SCHEMATIC. REMOVE ALL WORK AS INDICATED AND AS REQUIRED TO COMPLETE NEW CONSTRUCTION AS INDICATED. REFER TO CIVIL, LANDSCAPE, STRUCTURAL, MECHANICAL, PLUMBING AND ELECTRICAL DRAWINGS FOR FEATURES AND CONCEALED WORK NOT OTHERWISE SHOWN ON ARCHITECTURAL DRAWINGS.
3. SEE STRUCTURAL DRAWING FOR DEMOLITION OF STRUCTURE NOT OTHERWISE INDICATED, INCLUDING SHEAR WALLS, INTERIOR PARTITIONS, INTERIOR TRENCHES FOR INSTALLATION OF UNDERGROUND UTILITIES.
4. SEE MECHANICAL, PLUMBING, AND ELECTRICAL DRAWINGS FOR DEMOLITION OF ITEMS NOT OTHERWISE INDICATED, INCLUDING UNDERGROUND OR CONCEALED UTILITIES AND SERVICES.
5. NOTIFY LOCAL AGENCY HAVING JURISDICTION PRIOR TO STARTING DEMOLITION WORK. COMPLY WITH ALL AGENCY REQUIREMENTS.
6. OWNER WILL REMOVE FURNITURE, STORED MATERIALS AND MOVABLE EQUIPMENT IN THE AREA OF WORK PRIOR TO START OF DEMOLITION, UNLESS OTHERWISE NOTED.
7. VERIFY EXISTING CONDITIONS AND INVERT ELEVATIONS OF UNDERGROUND UTILITIES PRIOR TO DEMOLITION. NOTIFY ARCHITECT OF DISCREPANCIES AND REQUEST DIRECTION.
8. DRAWINGS ARE PREPARED FROM INFORMATION MADE AVAILABLE BY THE OWNER AND ARE NOT A GUARANTEE OF EXISTING OR CONCEALED CONDITIONS.
9. PROVIDE ALL SHORING, BRACING AND SUPPORTS REQUIRED TO PREVENT SETTLEMENT OR DISPLACEMENT.
10. DISCONNECT ALL AFFECTED UTILITIES PRIOR TO STARTING DEMOLITION WORK.
11. NEATLY CUT AND REMOVE SURFACES AND FINISHES AS REQUIRED OR TO A NATURAL POINT OF DIVISION TO ENABLE INSTALLATION OF UTILITIES OR OTHER CONCEALED WORK, WHETHER SPECIFICALLY SHOWN OR INFERRED FOR SUPPORT OR RENOVATION.
12. PROTECT EXISTING WORK DESIGNATED TO REMAIN FROM DAMAGE DUE TO DEMOLITION AND RECONSTRUCTION WORK.
13. REPAIR AND REPLACE ALL EXISTING SURFACES AND FINISHES TO MATCH EXISTING UNDISTURBED WORK.
14. CAP ALL ABANDONED UTILITIES BEHIND FACE OF NEW FINISHES, INCLUDING FINISH GRADE OR PAVING, RECORD ALL LOCATIONS ON RECORD DOCUMENTS.
15. ALL DEMOLISHED MATERIALS ARE THE PROPERTY OF THE CONTRACTOR, EXCEPT FOR SUCH ITEMS AS THE OWNER WISHES TO CLAIM. STOCKPILE THESE ITEMS ON THE SITE AS DIRECTED BY THE OWNER.
16. REMOVE DEMOLISHED MATERIALS FROM SITE AND DISPOSE OF IN A LEGAL MANNER.
17. REMOVE ALL EXISTING NAILS, TACKS, STAPLES, HANGER WIRES, SIGNAL WIRES, CABLES AND SIMILAR ITEMS FROM SURFACES TO REMAIN. PREPARE ALL REMAINING SURFACES / SUBSTRATE TO RECEIVE INDICATED FINISHES.
18. REMOVE AND STORE DESIGNATED EQUIPMENT / MATERIALS FOR RE-INSTALLATION AS INDICATED.
19. SELECTIVE DEMOLITION INDICATED IN THESE CONTRACT DOCUMENTS EXCLUDES REMOVAL OF HAZARDOUS MATERIALS AND TOXIC SUBSTANCES.
20. IF HAZARDOUS MATERIALS ARE DISCOVERED OR SUSPECTED DURING DEMOLITION OPERATIONS, STOP WORK AND NOTIFY OWNER'S REPRESENTATIVE FOR INSTRUCTIONS IMMEDIATELY. TAKE MEASURES TO PROTECT WORKERS AND PUBLIC. DIRECT ALL QUESTIONS ABOUT HAZARDOUS MATERIALS TO THE OWNER'S REPRESENTATIVE.
21. COORDINATE DEMOLITION WITH WORK OF HAZARDOUS MATERIAL ABATEMENT WORK AS DIRECTED BY OWNER.

KEYNOTES

A11.01	(E) CONCRETE SLAB TO REMAIN
B21.01	(E) METAL DOOR TO REMAIN; COUNTY ACCESS CONTROL HARDWARE.
B22.02	DEMOLISH (E) LOUVERED VENTS; PREPARE OPENING FOR (N) WORK
B22.03	REMOVE (E) T-111 SIDING; PREPARE WALL FOR NEW EXTERIOR FINISH.
B22.04	DEMOLISH (E) METAL VENT; PREPARE OPENING FOR NEW EXTERIOR FINISH
B22.05	REMOVE (E) WOOD FASCIA BOARDS & TRIM
B22.06	REMOVE & REPLACE (E) CABLE TRAY AT BUILDING ENTRY
B22.07	DEMOLISH AND REMOVE (E) DOOR. INFILL FRAME OPENING TO MATCH ADJACENT WALL
B32.01	REMOVE (E) EXTERIOR ROOFING DOWN TO PLYWOOD SUBSTRATE; PREPARE FOR NEW WORK
D51.01	(E) OVERHEAD POWER LINE TO REMAIN. COORDINATE POWER SHUTDOWN WITH OWNER. PROTECT DURING CONSTRUCTION.
D51.13	(E) ELECTRIC METER TO REMAIN; PROTECT DURING CONSTRUCTION; TYP.
D51.14	(E) ELECTRICAL CONDUIT; PROTECT DURING CONSTRUCTION; TYP. RE-INSTALL AT COMPLETION OF EXTERIOR FINISH WORK.
D52.03	REMOVE (E) THRU-WALL AC UNIT
D52.04	REMOVE (E) VENTILATION FAN AND LOUVERS
D52.07	TEMPORARILY DISCONNECT (E) GROUNDING BAR DURING CONSTRUCTION. RE-CONNECT UPON COMPLETION OF EXTERIOR SIDING WORK.
D52.08	TEMPORARILY DISCONNECT (E) EXTERIOR LIGHTING DURING CONSTRUCTION. RE-USE AND RE-INSTALL (E) LUMINAIRE.
D53.02	(E) ELECTRICAL SERVICE DROP MAST, SED. TEMPORARILY DISCONNECT SUPPORT RODS DURING CONSTRUCTION. COORDINATE SHUTDOWN WITH OWNER.
G00.03	(E) 60'± TALL ANTENNA ON EXISTING STRUCTURAL CONCRETE PAD, TO REMAIN
G00.14	(E) GENERATOR ON CONCRETE PAD, TO REMAIN
G00.18	(E) ERODED AREA OF (E) CONCRETE SLAB AT NORTH-WEST EDGE OF BUILDING; REINFORCE W/ (N) CONCRETE BOND BEAM; S.S.D.

ARCHITECT:
AXIA ARCHITECTS
540 Mendocino Ave, Santa Rosa, CA 95401
707 542-4652
axiaarchitects.com

CONSULTANT:

SONOMA COUNTY PUBLIC INFRASTRUCTURE
PINE MOUNTAIN ANTENNA COMMUNICATIONS BUILDING RECONSTRUCTION
33550 PINE MOUNTAIN RD., CLOVERDALE, CA 95425 APN: 117-240-051

SEAL:

Date Stamped: 4/7/2025 Permit #: BLD24-45 R01 Plans Examiner: Ronald Morris
REVIEWED FOR CODE COMPLIANCE - PERMIT SONOMA

SHEET LOG

REV #	DATE:	ISSUED FOR:
2	3/24/25	PERMIT RESUBMITTAL

JOB NUMBER: 1191

SHEET:
A1.3
EXISTING / DEMOLITION EXTERIOR ELEVATIONS

ORIGINAL DATE: 03/24/25

© AXIA ARCHITECTS

3/24/2025 3:16:44 PM C:\Users\dhilberman\Documents\1191 Pine Mtn Rd Comm Vault_C_V25_dhilberman@axiaarchitects.com.rvt

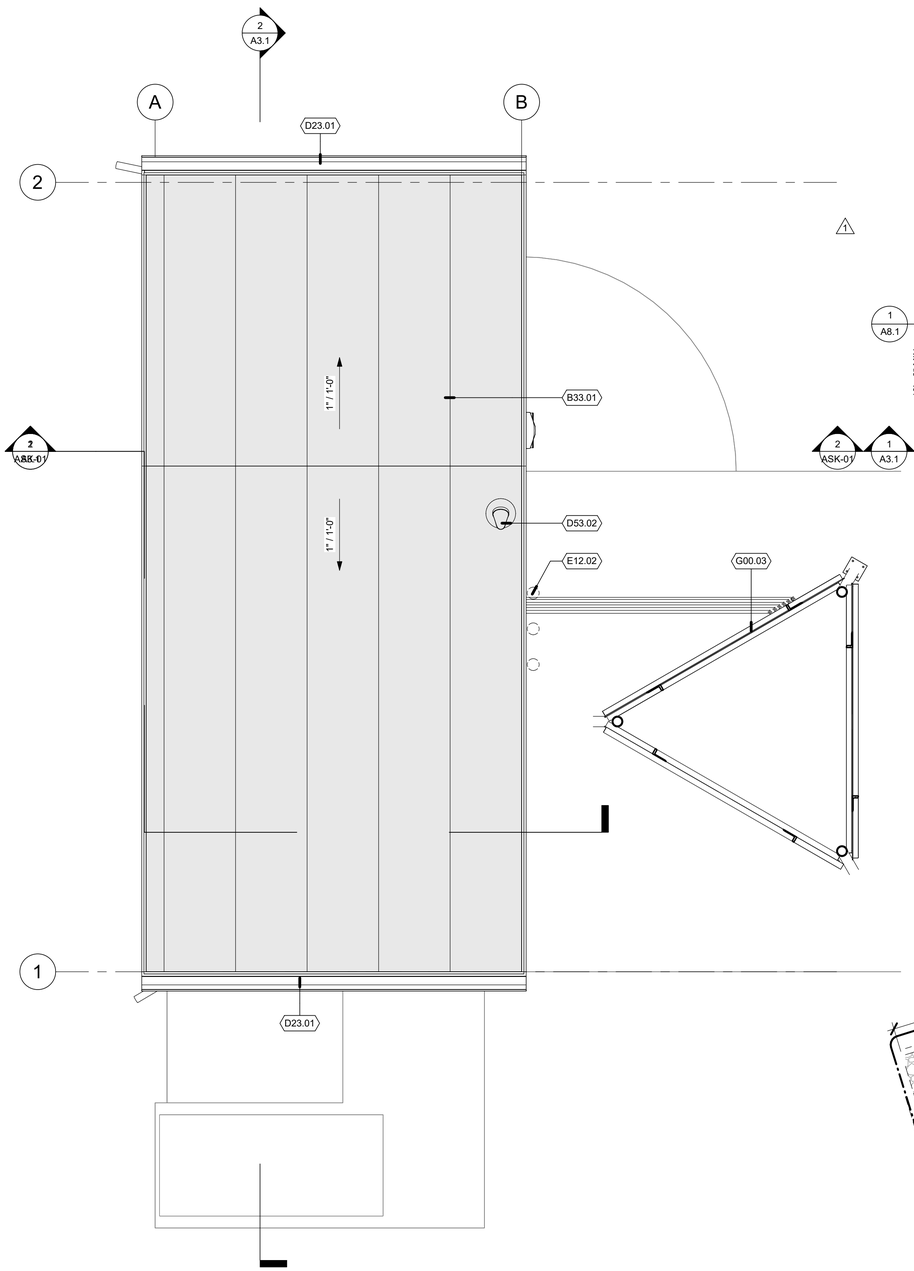

2 ROOF PLAN
A2.1 1/2" = 1'-0"

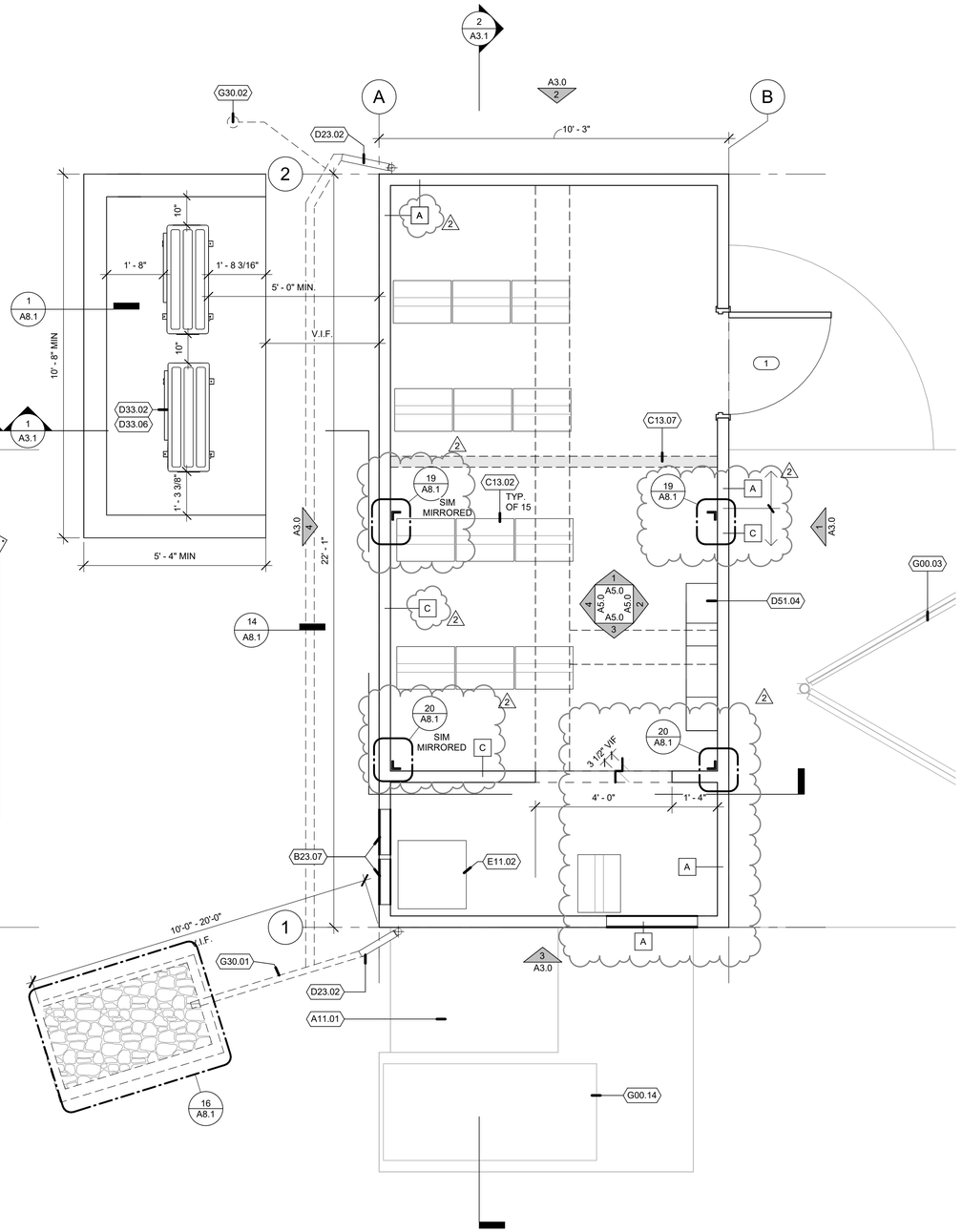

1 FLOOR PLAN
A2.1 1/2" = 1'-0"

DOOR SCHEDULE

MARK	DOOR PANEL							FRAME		DETAILS			HARDWARE	FIRE RATING	REMARKS
	TYPE	WIDTH	HEIGHT	THICKNESS	MATERIAL	FINISH	GLAZING	MATERIAL	FINISH	HEAD	JAMB	SILL			
1	A	3' - 0"	6' - 8"	0' - 2"	METAL	PAINTED	N	METAL	PAINTED	4/A8.0	18/A8.0	1/A8.0	DUMMY LEVER W/ ELECTRIC STRIKE	1 1/2 HOUR	PROVIDE KEY-CARD ENABLED ELECTRIC STRIKE. GASKETTED SELF-CLOSING W/ WALL STOP

1. SEE SPECIFICATION SECTION 08-7100 FOR ELECTRIC STRIKE REQUIREMENTS

FLOOR PLAN GENERAL NOTES

1. SCOPE DESCRIBED IS FOR COMPLETE PROJECT. CONTRACTOR SHALL REFER TO SHEET G2 AND COORDINATE WITH OWNER TO SEGMENT TIMING AND SEQUENCING OF WORK.
2. EXTERIOR PAVING: EXTERIOR DOOR LANDINGS SHALL SLOPE 1/4" PER FOOT MAXIMUM FOR DRAINAGE. PAVING AND EXTERIOR GRADE SHALL SLOPE MINIMUM 1/8" PER FOOT AWAY FROM BUILDINGS.
3. ELEVATIONS SHOWN ARE MEASURED FROM FINISHED FLOOR DATUM FOR THIS BUILDING. REFER TO CIVIL ENGINEERING DRAWINGS FOR ELEVATIONS RELATIVE TO THE REST OF THE SITE AND FOR SITE FEATURES NOT OTHERWISE INDICATED.
4. REFER TO MECHANICAL & PLUMBING DRAWINGS FOR PIPING REGISTERS AND VENTS NOT OTHERWISE SHOWN.
5. REFER TO ELECTRICAL DRAWINGS FOR CONCEALED CONDUITS, SWITCHES AND OTHER FEATURES NOT OTHERWISE SHOWN.
6. PROVIDE BLOCKING, BACKING, FRAMING, SHEATHING, UTILITIES OR OTHER CONCEALED WORK, WHETHER SPECIFICALLY SHOWN OR INFERRED. REFER TO STRUCTURAL, MECHANICAL, PLUMBING, AND ELECTRICAL DRAWINGS FOR CONCEALED WORK NOT SHOWN ON ARCHITECTURAL DRAWINGS.

ROOF PLAN GENERAL NOTES

1. ALL ROOF MATERIALS TO BE CLASS A RATED OR NON-COMBUSTIBLE CONFORMING TO CBC1503 AND 1504.
2. REFER TO STRUCTURAL, MECHANICAL, PLUMBING, AND ELECTRICAL DRAWINGS FOR EQUIPMENT, DUCTWORK, PENETRATIONS AND OTHER FEATURES NOT OTHERWISE SHOWN.
3. MECHANICAL / PLUMBING VENT FLASHINGS, PIPE BOOTS PER MECHANICAL DRAWINGS.
4. MECHANICAL UNIT MOUNTING PER MECHANICAL DRAWINGS.
5. ELEVATIONS SHOWN ARE MEASURED FROM FINISHED FLOOR DATUM FOR THIS BUILDING. REFER TO CIVIL DRAWINGS FOR ELEVATIONS RELATIVE TO THE REST OF THE SITE AND FOR SITE FEATURES NOT OTHERWISE INDICATED.
6. PROVIDE BLOCKING, BACKING, FRAMING, SHEATHING, UTILITIES OR OTHER CONCEALED WORK, WHETHER SPECIFICALLY SHOWN OR INFERRED. REFER TO STRUCTURAL, MECHANICAL, PLUMBING, AND ELECTRICAL DRAWINGS FOR CONCEALED WORK NOT SHOWN ON ARCHITECTURAL DRAWINGS.
7. NEATLY CUT AND REMOVE SURFACES AND FINISHES AS REQUIRED OR TO A NATURAL POINT OF DIVISION TO ENABLE INSTALLATION OF BLOCKING, BACKING, FRAMING, SHEATHING, UTILITIES OR OTHER CONCEALED WORK, WHETHER SPECIFICALLY SHOWN OR INFERRED FOR SUPPORT OR RENOVATION. REFER TO STRUCTURAL, MECHANICAL, PLUMBING, AND ELECTRICAL DRAWINGS FOR CONCEALED WORK NOT SHOWN ON ARCHITECTURAL DRAWINGS.
8. REPAIR AND REPLACE ALL EXISTING SURFACES AND FINISHES TO MATCH EXISTING UNDISTURBED WORK.

DOOR GENERAL NOTES

1. **WEATHERTIGHT SEAL REQUIRED:** LIMIT AIR LEAKAGE AROUND ALL EXTERIOR OPENING PERIMETERS WHEN IN A CLOSED POSITION. PROVIDE WEATHERTIGHT SEAL AT HEAD, SILL, JAMBS AND AT MEETING RAILS OF DOUBLE DOORS.
2. **TEMPERED PANES:** EACH 6MM TEMPERED PANE COMPOSED OF A SINGLE THICKNESS OF TEMPERED GLASS, CLEAR OR TINTED AS INDICATED FOR APPLICATION AND LOCATION IN ASSEMBLIES.

DOOR SCHEDULE LEGEND

1. **DOOR CONSTRUCTION:**
   IM = INSULATED METAL
3. **FACING & FINISH:**
   FF = FACTORY FINISH
   PSG = PAINT SEMI-GLOSS
4. **FRAME MATERIAL:**
   STL = STEEL FRAME
5. **FIRE RATING: 3/4, 1, 1 1/2 ETC.**
   INDICATES HOURS OF OPENING ASSEMBLY FIRE RATING
   ALL FIRE RATED OPENINGS SHALL BE SELF-CLOSING.
   NR = NO RATING REQUIRED
6. **DOOR REMARKS:**
   UC = UNDERCUT DOOR 5/8"
   CR = CARD READER ACCESS CONTROL FOR INGRESS, SYSTEM HALL NOT PREVENT EGRESS, COORDINATE WITH OWNER

   -- = NOT APPLICABLE OR NOT PROVIDED

KEYNOTES

A11.01	(E) CONCRETE SLAB TO REMAIN
B23.07	INFILL (E) VENTS W/ (N) EXTERIOR WALL ASSEMBLY
B33.01	INSTALL MECHANICALLY-FASTENED STANDING SEAM ROOF & INSULATION OVER EXISTING ROOF FRAMING; SEE DETAILS
C13.02	EQUIPMENT RACKS, OFOI
C13.07	APPROX. LINE OF TEMPORARY CONSTRUCTION PARTITION SHOWN DASHED FOR REFERENCE
D23.01	INSTALL (N) METAL GUTTER & DOWNSPOUT; SEE DETAIL
D23.02	ANGLE (N) DOWNSPOUT TOWARD DOWNWARD SLOPING SIDE OF VAULT.
D33.02	INSTALL GROUND-MOUNTED HEAT PUMP UNIT, SMD
D33.06	HVAC UNITS CONTROLLED BY REMOTE WIRELESS SYSTEM PER MFR SPECIFICATIONS. SMD.
D51.04	(E) WALL MOUNTED GENERATOR ATS, TO REMAIN. PROTECT DURING CONSTRUCTION; TYP.
D53.02	(E) ELECTRICAL SERVICE DROP MAST, SED. TEMPORARILY DISCONNECT SUPPORT RODS DURING CONSTRUCTION. COORDINATE SHUTDOWN WITH OWNER.
E11.02	OWNER TO DISCONNECT AND RELOCATE (E) BATTERY DURING CONSTRUCTION
E12.02	(E) EQUIPMENT MASTS AND SENSORS SURFACE MOUNTED TO (E) VAULT EXTERIOR WALL TO REMAIN; TYP. U.N.O.
G00.03	(E) 60'± TALL ANTENNA ON EXISTING STRUCTURAL CONCRETE PAD, TO REMAIN
G00.14	(E) GENERATOR ON CONCRETE PAD, TO REMAIN
G30.01	NEW 3" DIAMETER HDPE STORM DRAINAGE LINE SET 18" BELOW GRADE SLOPED TO OUTLET AT RIP RAP. BACKFILL TRENCH WITH SOIL - PEA GRAVEL TO 95% COMPACTION.
G30.02	STORM DRAINAGE CLEANOUT; V.I.F.

ARCHITECT:
AXIA ARCHITECTS
540 Mendocino Ave, Santa Rosa, CA 95401
707 542-4652
axiaarchitects.com

CONSULTANT:

SONOMA COUNTY PUBLIC INFRASTRUCTURE

PINE MOUNTAIN ANTENNA COMMUNICATIONS BUILDING RECONSTRUCTION

33550 PINE MOUNTAIN RD., CLOVERDALE, CA 95425 APN: 117-240-051

SEAL:

Date Stamped: 4/7/2025 Permit # BD2025-0045 R01 Plans Examiner: Ronald Morris
REVIEWED FOR CODE COMPLIANCE - PERMIT SONOMA

SHEET LOG

REV #	DATE:	ISSUED FOR:
1	09/19/24	ADDENDUM 01
2	3/24/25	PERMIT RESUBMITTAL

JOB NUMBER: 1191

SHEET:

A2.1

FLOOR PLAN & ROOF PLAN

ORIGINAL DATE: 03/24/25

© AXIA ARCHITECTS

3/24/2025 3:16:54 PM C:\Users\dhilberman\Documents\1191 Pine Mtn Rd Comm Vault_C_V25_dhilberman@axiaarchitects.com.rvt

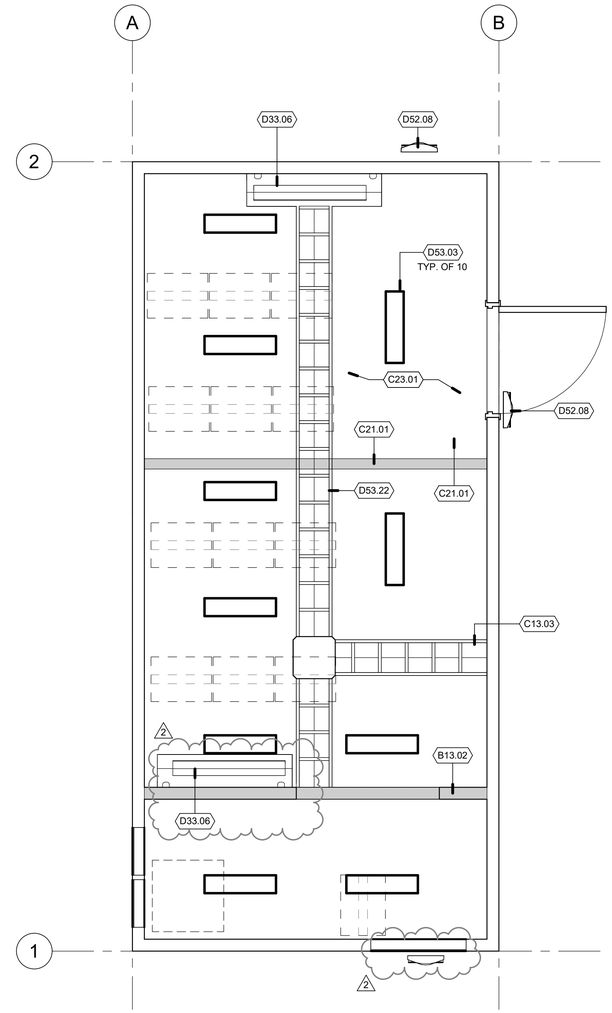

1 / A2.2 **(N) REFLECTED CEILING PLAN**
1/2" = 1'-0"

REFLECTED CEILING PLAN GENERAL NOTES

1. REPAIR AND REPLACE ALL EXISTING SURFACES AND FINISHES TO MATCH EXISTING UNDISTURBED WORK.

KEYNOTES

B13.02	BEAM; S.S.D.
C13.03	COMMUNICATION CABLE WALL PENETRATION OVERHEAD
C21.01	(E) RIDGE BEAM TO REMAIN
C23.01	INSTALL (N) PTD. GYP. GLG.
D33.06	HVAC UNITS CONTROLLED BY REMOTE WIRELESS SYSTEM PER MFR SPECIFICATIONS. SMD.
D52.08	TEMPORARILY DISCONNECT (E) EXTERIOR LIGHTING DURING CONSTRUCTION. RE-USE AND RE-INSTALL (E) LUMINAIRE.
D53.03	SURFACE MOUNTED LUMINAIRE, SED
D53.22	INSTALL NEW DATA CABLING TRAY AT CENTERLINE OF BUILDING. MOUNT NEW CABLE TRAY ABOVE EXISTING TRAY. OWNER WILL TRANSFER ALL CABLING TO NEW TRAY AND DISASSEMBLE EXISTING. MAINTAIN EXISTING CABLE ENTRY POINT AT BUILDING EAST WALL.

ARCHITECT:
AXIA ARCHITECTS
540 Mendocino Ave, Santa Rosa, CA 95401
707 542-4652
axiaarchitects.com

CONSULTANT:

SONOMA COUNTY PUBLIC INFRASTRUCTURE

PINE MOUNTAIN ANTENNA COMMUNICATIONS BUILDING RECONSTRUCTION

33550 PINE MOUNTAIN RD., CLOVERDALE, CA 95425 APN: 117-240-051

SEAL:

Date Stamped: 4/7/2025 Permit # BLD24-0145-R01 Plans Examiner: Ronald Morris
REVIEWED FOR CODE COMPLIANCE - PERMIT SONOMA

SHEET LOG

REV #	DATE:	ISSUED FOR:
2	3/24/25	PERMIT RESUBMITTAL

JOB NUMBER: 1191

SHEET:

A2.2

REFLECTED CEILING PLAN

ORIGINAL DATE: 03/24/25

© AXIA ARCHITECTS

3/24/2025 3:17:03 PM C:\Users\dhilberman\Documents\1191 Pine Mtn Rd Comm Vault_C_V25_dhilberman@axiaarchitects.com.rvt

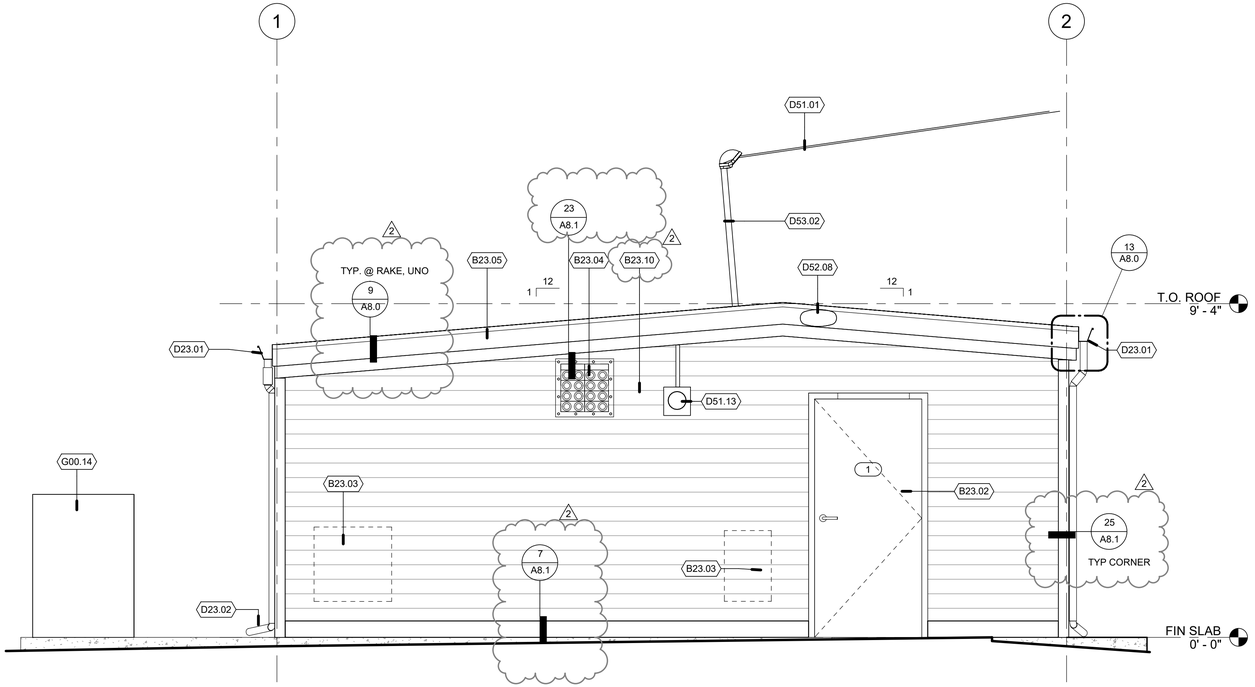

1 / A3.0 EAST ELEVATION
1/2" = 1'-0"

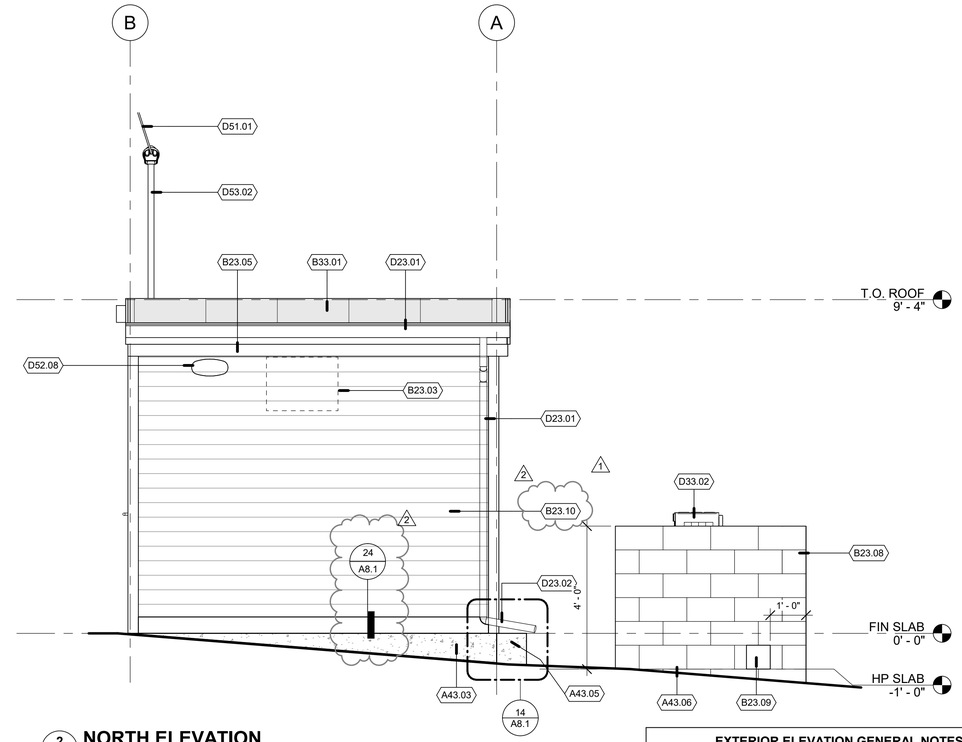

2 / A3.0 NORTH ELEVATION
1/2" = 1'-0"

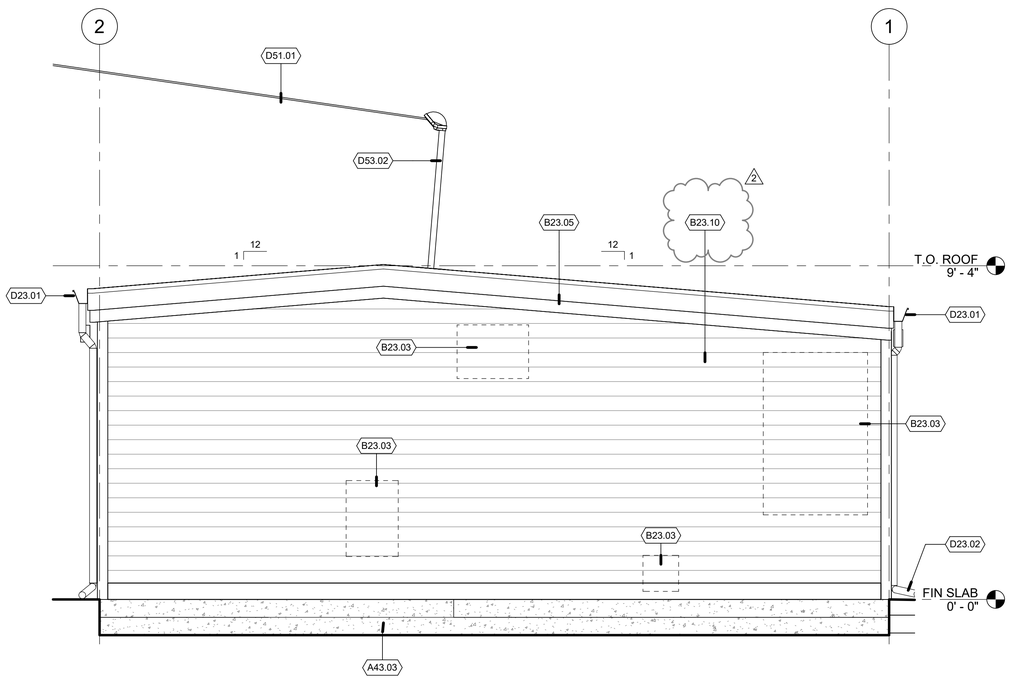

4 / A3.0 WEST ELEVATION
1/2" = 1'-0"

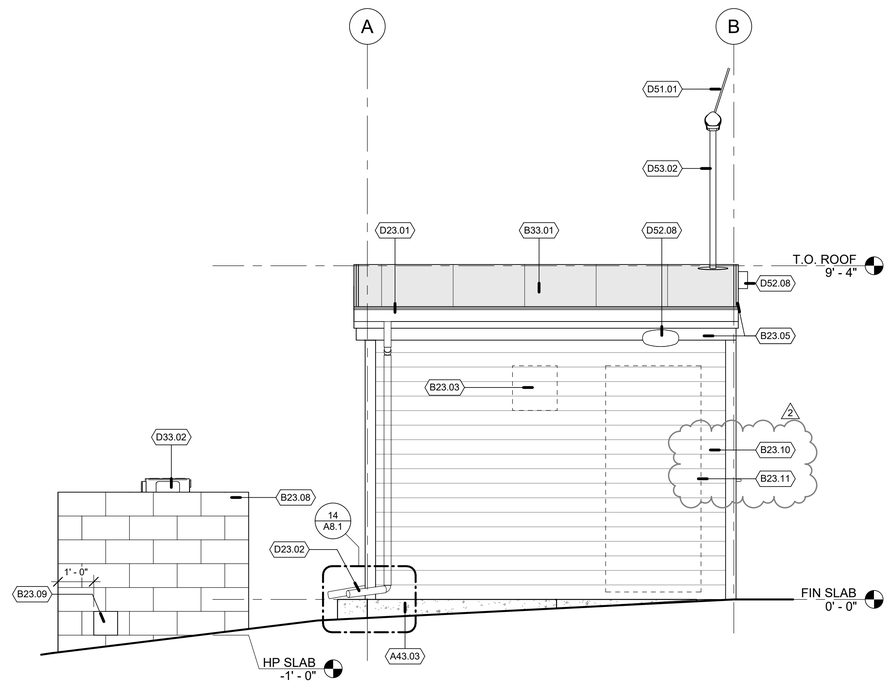

3 / A3.0 SOUTH ELEVATION
1/2" = 1'-0"

EXTERIOR ELEVATION GENERAL NOTES

1. SLOPE FINISH GRADE 2% MINIMUM AWAY FROM BUILDING FOR 5'-0" MINIMUM, DIRECT DRAINAGE AWAY FROM BUILDING WALLS, ELIMINATE PONDING. REFER TO CIVIL DRAWINGS FOR FINISH FLOOR ELEVATION AND GRADES ADJACENT TO BUILDING OTHERWISE.
2. REFER TO MECHANICAL, PLUMBING, AND ELECTRICAL DRAWINGS FOR GRILLES, REGISTERS, PANELS, PULL STATIONS AND OTHER FEATURES NOT OTHERWISE SHOWN.
3. FLASH AND SEAL ALL PENETRATIONS THROUGH EXTERIOR ROOFS AND WALLS, AND FLOORS WEATHER TIGHT AND WATERPROOF. PACK ALL PENETRATIONS THROUGH THE BUILDING INSULATION ENVELOPE WITH INSULATION.
4. FLASH ALL WINDOWS, DOORS, LOUVERS, ACCESS PANELS AND SIMILAR WALL OPENINGS PER DETAIL 4/A8.0.
5. PROVIDE CEMENT PLASTER CONTROL JOINTS AS INDICATED AND AS FOLLOWS: PROVIDE CONTROL JOINTS SO THAT THE MAXIMUM DISTANCE BETWEEN JOINTS, VERTICALLY OR HORIZONTALLY DOES NOT EXCEED 12'-0". ALL CEMENT PLASTER "PANELS" SHALL BE DEFINED BY FOUR STRAIGHT AND UNINTERRUPTED EDGES; PROVIDE JOINTS AS REQUIRED TO AVOID INSIDE CORNERS IN ANY INDIVIDUAL PANEL.
6. ELEVATIONS SHOWN ARE MEASURED FROM FINISHED FLOOR DATUM FOR THIS BUILDING. REFER TO CIVIL DRAWINGS FOR ELEVATIONS RELATIVE TO THE REST OF THE SITE AND FOR SITE FEATURES NOT OTHERWISE INDICATED.
7. PROVIDE BLOCKING, BACKING, FRAMING, SHEATHING, UTILITIES OR OTHER CONCEALED WORK, WHETHER SPECIFICALLY SHOWN OR INFERRED. REFER TO STRUCTURAL, MECHANICAL, PLUMBING, AND ELECTRICAL DRAWINGS FOR CONCEALED WORK NOT SHOWN ON ARCHITECTURAL DRAWINGS.
8. NEATLY CUT AND REMOVE SURFACES AND FINISHES AS REQUIRED OR TO A NATURAL POINT OF DIVISION TO ENABLE INSTALLATION OF BLOCKING, BACKING, FRAMING, SHEATHING, UTILITIES OR OTHER CONCEALED WORK, WHETHER SPECIFICALLY SHOWN OR INFERRED FOR SUPPORT OR RENOVATION. REFER TO STRUCTURAL, MECHANICAL, PLUMBING, AND ELECTRICAL DRAWINGS FOR CONCEALED WORK NOT SHOWN ON ARCHITECTURAL DRAWINGS.
9. REPAIR AND REPLACE ALL EXISTING SURFACES AND FINISHES TO MATCH EXISTING UNDISTURBED WORK.

KEYNOTES

A43.03	REINFORCE (E) CONCRETE SLAB; S.S.D.
A43.05	(N) CONCRETE BEAM AT NORTH & WEST SIDE OF STRUCTURE; S.S.D.
A43.06	(N) NON-STRUCTURAL CONCRETE SLAB
B23.02	(N) INSULATED METAL DOOR ASSEMBLY W/ GROUT FILLED STEEL FRAME, COUNTY ACCESS CONTROL HARDWARE, PAINTED, COLOR TO BE PROVIDED BY ARCHITECT
B23.03	AREA OF DEMOLISHED VENTING SHOWN DASHED FOR REFERENCE
B23.04	INSTALL FIRE RATED PENETRATION CABLE TRANSIT SYSTEM WITH METAL FRAME AND MODULAR SEALS
B23.05	INSTALL (N) FIBER-CEMENT FASCIA BOARD; SEE DETAIL
B23.08	(N) CMU WALL AT HEAT-PUMP SLAB
B23.09	8" X 8" DRAINAGE WEEP AT NORTH & SOUTH CMU WALLS
B23.10	PAINTED CEMENTITIOUS HORIZONTAL LAP SIDING, 6" EXPOSURE
B23.11	AREA OF DEMOLISHED DOOR AND NEW INFILL WALL SHOWN DASHED FOR REFERENCE
B33.01	INSTALL MECHANICALLY-FASTENED STANDING SEAM ROOF & INSULATION OVER EXISTING ROOF FRAMING; SEE DETAILS
D23.01	INSTALL (N) METAL GUTTER & DOWNSPOUT; SEE DETAIL
D23.02	ANGLE (N) DOWNSPOUT TOWARD DOWNWARD SLOPING SIDE OF VAULT.
D33.02	INSTALL GROUND-MOUNTED HEAT PUMP UNIT, SMD
D51.01	(E) OVERHEAD POWER LINE TO REMAIN. COORDINATE POWER SHUTDOWN WITH OWNER. PROTECT DURING CONSTRUCTION.
D51.13	(E) ELECTRIC METER TO REMAIN; PROTECT DURING CONSTRUCTION; TYP.
D52.08	TEMPORARILY DISCONNECT (E) EXTERIOR LIGHTING DURING CONSTRUCTION. RE-USE AND RE-INSTALL (E) LUMINAIRE.
D53.02	(E) ELECTRICAL SERVICE DROP MAST, SED. TEMPORARILY DISCONNECT SUPPORT RODS DURING CONSTRUCTION. COORDINATE SHUTDOWN WITH OWNER.
G00.14	(E) GENERATOR ON CONCRETE PAD, TO REMAIN

ARCHITECT:
AXIA ARCHITECTS
540 Mendocino Ave, Santa Rosa, CA 95401
707 542-4652
axiaarchitects.com

CONSULTANT:

SONOMA COUNTY PUBLIC INFRASTRUCTURE

PINE MOUNTAIN ANTENNA COMMUNICATIONS BUILDING RECONSTRUCTION

33550 PINE MOUNTAIN RD., CLOVERDALE, CA 95425 APN: 117-240-051

SEAL:

Date Stamped: 4/7/2025 Permit # BD2025-R01 Plans Examiner: Ronald Morris
REVIEWED FOR CODE COMPLIANCE - PERMIT SONOMA

SHEET LOG

REV #	DATE:	ISSUED FOR:
1	09/19/24	ADDENDUM 01
2	3/24/25	PERMIT RESUBMITTAL

JOB NUMBER: 1191

SHEET:

A3.0

EXTERIOR ELEVATIONS

ORIGINAL DATE: 03/24/25

© AXIA ARCHITECTS

3/24/2025 3:28:35 PM C:\Users\dhilberman\Documents\1191 Pine Mtn Rd Comm Vault_C_V25_dhilberman@axiaarchitects.com.rvt

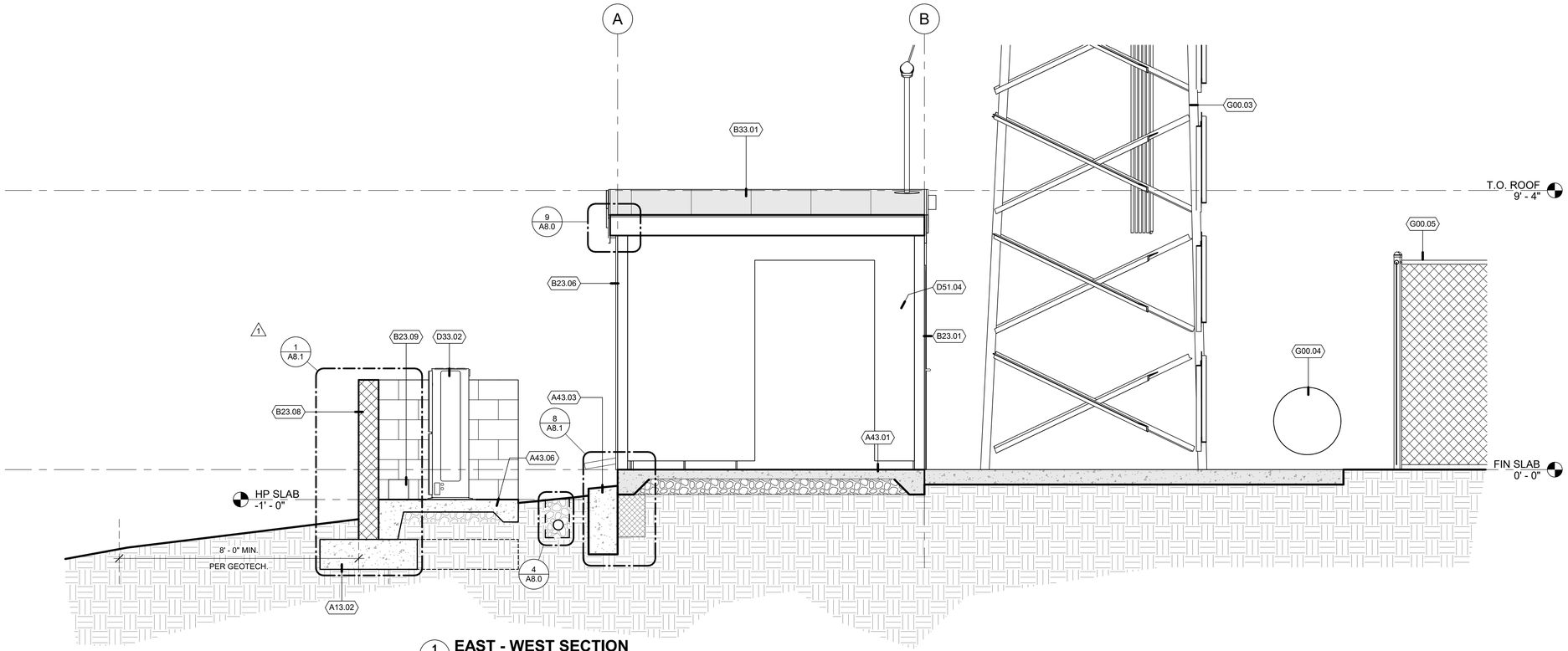

1 A3.1 **EAST - WEST SECTION**
1/2" = 1'-0"

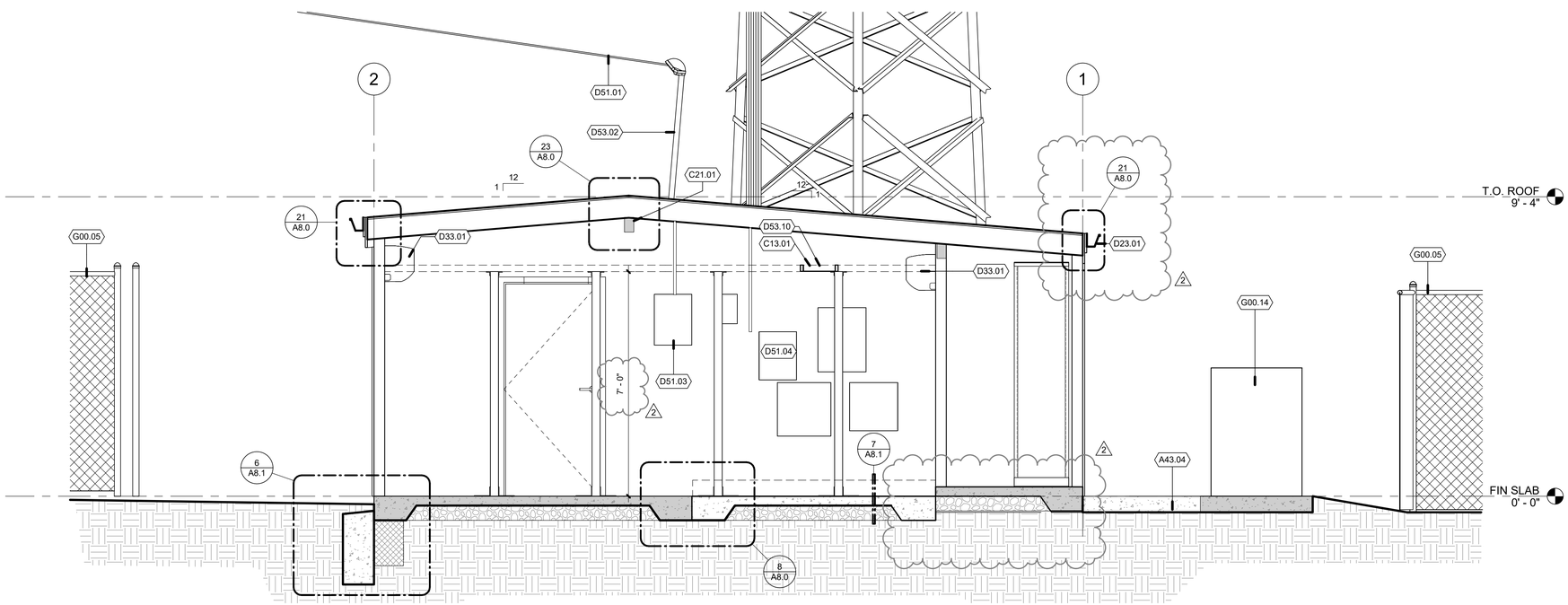

2 A3.1 **NORTH - SOUTH SECTION**
1/2" = 1'-0"

BUILDING SECTION GENERAL NOTES

1. ELEVATIONS SHOWN ARE MEASURED FROM FINISHED FLOOR DATUM FOR THIS BUILDING. REFER TO CIVIL ENGINEERING DRAWINGS FOR ELEVATIONS RELATIVE TO THE REST OF THE SITE AND FOR SITE FEATURES NOT OTHERWISE INDICATED.
2. REFER TO FINISH SCHEDULE FOR FINISHES, TYPICAL.
3. REFER TO INTERIOR ELEVATIONS FOR INFORMATION AND FEATURES NOT SHOWN.
4. FLASH AND SEAL ALL PENETRATIONS THROUGH EXTERIOR ROOFS AND WALLS, AND FLOORS WEATHER TIGHT AND WATERPROOF. PACK ALL PENETRATIONS THROUGH THE BUILDING INSULATION ENVELOPE WITH INSULATION.
5. FLASH ALL WINDOWS, DOORS, LOUVERS, ACCESS PANELS AND SIMILAR WALL OPENINGS PER DETAILS ON SHEET A8.0
6. ROOF AND EXTERIOR WALL INSULATION IS EXISTING, INSTALLED AS PART OF APPROVED BUILDING CONSTRUCTION. REPAIR AND PATCH ALL INSULATION DISTURBED BY NEW CONSTRUCTION. PROVIDE AND MAINTAIN COMPLETE THERMAL BARRIER MATCHING ORIGINAL DESIGN.
7. ROOF AND EXTERIOR WALL FIRE RATING IS EXISTING, INSTALLED AS PART OF APPROVED BUILDING CONSTRUCTION. REPAIR AND PATCH ALL FIRE-RATED ASSEMBLIES DISTURBED BY NEW CONSTRUCTION. PROVIDE AND MAINTAIN COMPLETE FIRE-RATED ASSEMBLIES MATCHING ORIGINAL DESIGN.
8. FIREBLOCKING, CBC 718.2.: PROVIDE MATERIALS COMPLYING WITH CBC 718.2.1 AT CONCEALED SPACES, FURRED SPACES, CEILING/FLOOR LEVELS AND 10'-0" INTERVALS ALONG LENGTH OF WALL, SOFFITS, DROP CEILINGS, AND COVE CEILINGS, CONCEALED PLACES BETWEEN STAIR STRINGERS & BETWEEN STUDS IN LINE WITH STAIR RUN, AND ALL LOCATIONS LISTED IN CBC 718.2.2 THROUGH 718.2.7.

KEYNOTES

A13.02	CONCRETE FOOTING, SSD
A43.01	CONCRETE SLAB, SSD
A43.03	REINFORCE (E) CONCRETE SLAB; S.S.D.
A43.04	POUR (N) CONCRETE SLAB FLUSH WITH EXISTING SLAB AT AREA 2
A43.06	(N) NON-STRUCTURAL CONCRETE SLAB
B23.01	PLASTER EXTERIOR WALL ASSEMBLY; SEE DETAIL
B23.06	INFILL (E) DOOR W/ (N) EXTERIOR WALL ASSEMBLY
B23.08	(N) CMU WALL AT HEAT-PUMP SLAB
B23.09	8" X 8" DRAINAGE WEEP AT NORTH & SOUTH CMU WALLS
B33.01	INSTALL MECHANICALLY-FASTENED STANDING SEAM ROOF & INSULATION OVER EXISTING ROOF FRAMING; SEE DETAILS
C13.01	SUSPENDED OVERHEAD METAL LADDER RACK
C21.01	(E) RIDGE BEAM TO REMAIN
D23.01	INSTALL (N) METAL GUTTER & DOWNSPOUT; SEE DETAIL
D33.01	WALL-MOUNTED DUCTLESS MECHANICAL SYSTEM CASSETTE, SMD
D33.02	INSTALL GROUND-MOUNTED HEAT PUMP UNIT, SMD
D51.01	(E) OVERHEAD POWER LINE TO REMAIN. COORDINATE POWER SHUTDOWN WITH OWNER. PROTECT DURING CONSTRUCTION.
D51.03	(E) ELECTRICAL SERVICE METER AND SERVICE DROP ABOVE. PROTECT DURING CONSTRUCTION.
D51.04	(E) WALL MOUNTED GENERATOR ATS, TO REMAIN. PROTECT DURING CONSTRUCTION; TYP.
D53.02	(E) ELECTRICAL SERVICE DROP MAST, SED. TEMPORARILY DISCONNECT SUPPORT RODS DURING CONSTRUCTION. COORDINATE SHUTDOWN WITH OWNER.
D53.10	NEW ROUTING OF TELECOM AND DATA CABLING, OFOI
G00.03	(E) 60'± TALL ANTENNA ON EXISTING STRUCTURAL CONCRETE PAD, TO REMAIN
G00.04	(E) PROPANE TANK SEISMICALLY ANCHORED TO EXISTING STRUCTURAL CONCRETE PAD, TO REMAIN
G00.05	(E) 6' CHAIN LINK FENCE, EXTENT OF LEASED PROPERTY BY COUNTY, TO REMAIN
G00.14	(E) GENERATOR ON CONCRETE PAD, TO REMAIN

ARCHITECT:
AXIA ARCHITECTS
540 Mendocino Ave, Santa Rosa, CA 95401
707 542-9652
axiaarchitects.com

CONSULTANT:

SONOMA COUNTY PUBLIC INFRASTRUCTURE

PINE MOUNTAIN ANTENNA COMMUNICATIONS BUILDING RECONSTRUCTION

33550 PINE MOUNTAIN RD., CLOVERDALE, CA 95425 APN: 117-240-051

SEAL:

Date Stamped: 4/7/2025 Permit # BLD-25-R01 Plans Examiner: Ronald Morris
REVIEWED FOR CODE COMPLIANCE - PERMIT SONOMA

SHEET LOG

REV #	DATE:	ISSUED FOR:
1	09/19/24	ADDENDUM 01
2	3/24/25	PERMIT RESUBMITTAL

JOB NUMBER: 1191

SHEET:

A3.1

BUILDING SECTIONS

ORIGINAL DATE: 03/24/25

© AXIA ARCHITECTS

3/24/2025 3:17:20 PM C:\Users\dhilberman\Documents\1191 Pine Mtn Rd Comm Vault_C_V25_dhilberman@axiaarchitects.com.rvt

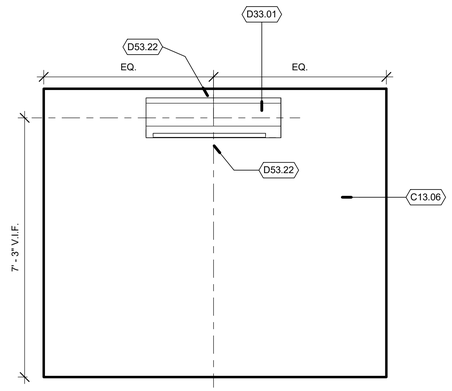

1 A5.0 **INTERIOR ELEVATION - NORTH**
1/2" = 1'-0"

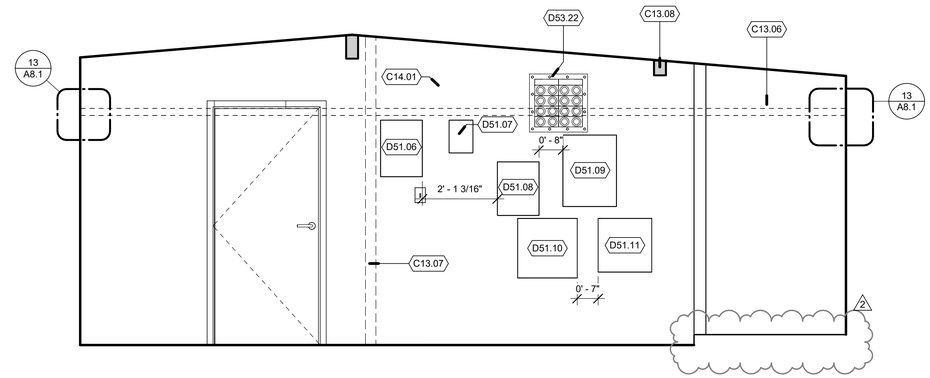

2 A5.0 **INTERIOR ELEVATION - EAST**
1/2" = 1'-0"

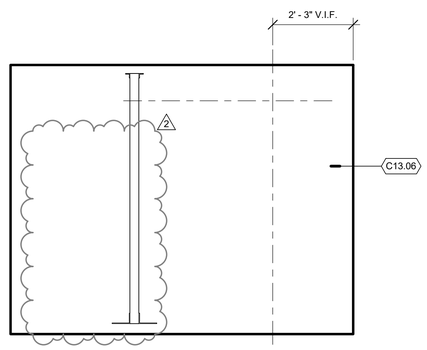

3 A5.0 **INTERIOR ELEVATION - SOUTH**
1/2" = 1'-0"

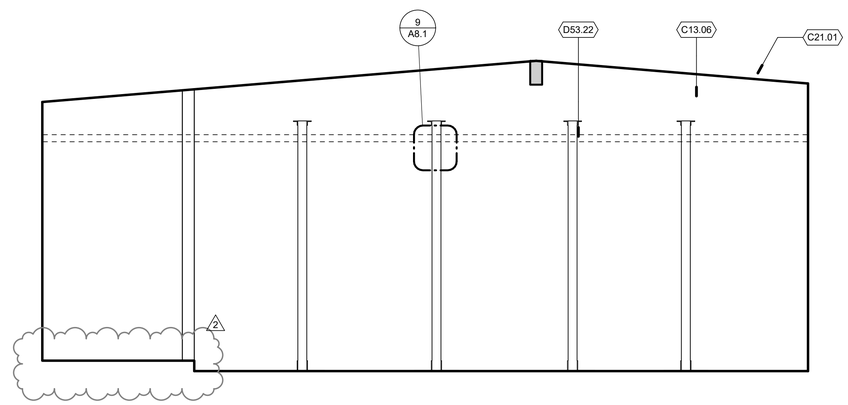

4 A5.0 **INTERIOR ELEVATION - WEST**
1/2" = 1'-0"

INTERIOR ELEVATION GENERAL NOTES

1. REPAIR AND REPLACE ALL EXISTING SURFACES AND FINISHES TO MATCH EXISTING UNDISTURBED WORK.
2. REFER TO MECHANICAL, PLUMBING, AND ELECTRICAL DRAWINGS FOR EQUIPMENT, DEVICES, LIGHT FIXTURES AND REGISTERS NOT OTHERWISE NOTED.

KEYNOTES

C13.06	PTD. GYP. BD.; TYP.
C13.07	APPROX. LINE OF TEMPORARY CONSTRUCTION PARTITION SHOWN DASHED FOR REFERENCE
C13.08	NEW STRUCTURAL HEADER; S.S.D.
C14.01	CONSTRUCT (N) TEMPORARY CONSTRUCTION PARTITION DURING PHASE 1 OF CONSTRUCTION. REMOVE THIS PARTITION IN PHASE 4 OF CONSTRUCTION. SEE PHASING DIAGRAM.
C21.01	(E) RIDGE BEAM TO REMAIN
D33.01	WALL-MOUNTED DUCTLESS MECHANICAL SYSTEM CASSETTE, SMD
D51.06	(E) A/C LEAD LAG PANEL
D51.07	(E) MAIN SHUTOFF PANEL
D51.08	(E) BREAKER PANEL
D51.09	(E) GENERATOR TRANSFORMER SWITCH
D51.10	(E) LINE SURGE SUPPRESSION
D51.11	(E) DEHYDRATOR PANEL
D53.22	INSTALL NEW DATA CABLING TRAY AT CENTERLINE OF BUILDING. MOUNT NEW CABLE TRAY ABOVE EXISTING TRAY. OWNER WILL TRANSFER ALL CABLING TO NEW TRAY AND DISASSEMBLE EXISTING. MAINTAIN EXISTING CABLE ENTRY POINT AT BUILDING EAST WALL.

ARCHITECT:
AXIA ARCHITECTS
540 Mendocino Ave, Santa Rosa, CA 95401
707 542-4652
axiaarchitects.com

CONSULTANT:

SONOMA COUNTY PUBLIC INFRASTRUCTURE

PINE MOUNTAIN ANTENNA COMMUNICATIONS BUILDING RECONSTRUCTION

33550 PINE MOUNTAIN RD., CLOVERDALE, CA 95425 APN: 117-240-051

SEAL:

Date Stamped: 4/7/2025 Permit # BLD24-0245 R01 Plans Examiner: Ronald Morris
REVIEWED FOR CODE COMPLIANCE - PERMIT SONOMA

SHEET LOG

REV #	DATE:	ISSUED FOR:
2	3/24/25	PERMIT RESUBMITTAL

JOB NUMBER: 1191

SHEET:

A5.0

INTERIOR ELEVATIONS

ORIGINAL DATE: 03/24/25

© AXIA ARCHITECTS

3/24/2025 3:17:28 PM C:\Users\dhilberman\Documents\1191 Pine Mtn Rd Comm Vault_C_V25_dhilberman@axiaarchitects.com.rvt

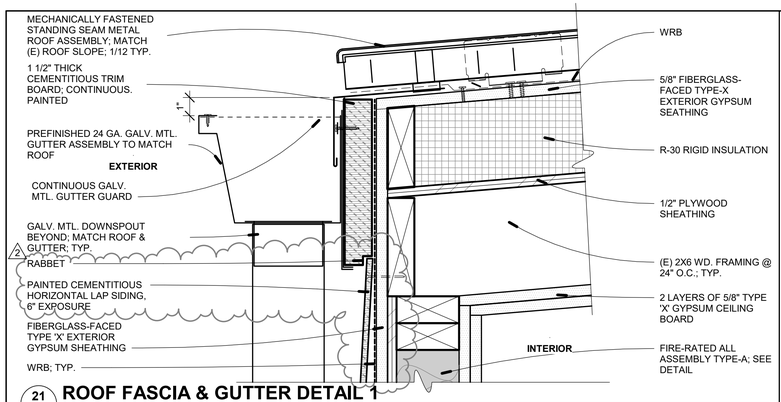

21 A8.0 **ROOF FASCIA & GUTTER DETAIL 1**
3" = 1'-0"

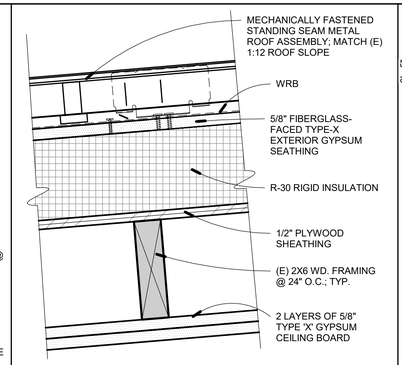

13 A8.0 **ROOF ASSEMBLY DETAIL**
3" = 1'-0"

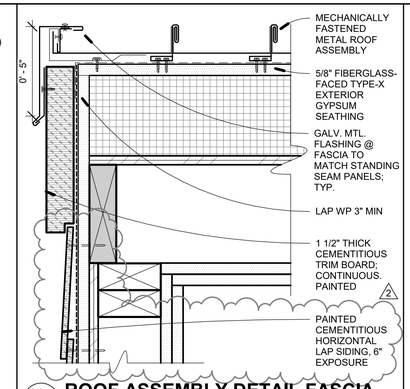

9 A8.0 **ROOF ASSEMBLY DETAIL FASCIA**
3" = 1'-0"

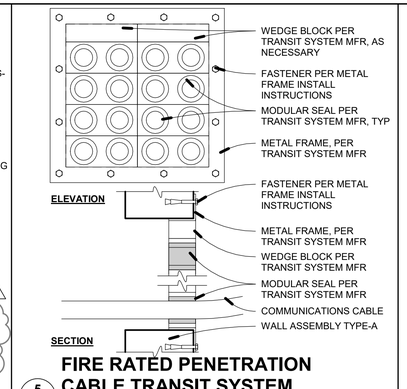

5 A8.0 **FIRE RATED PENETRATION CABLE TRANSIT SYSTEM**
1 1/2" = 1'-0"

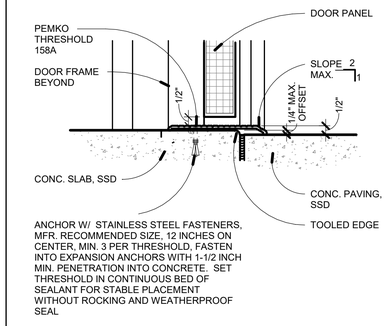

1 A8.0 **EXTERIOR THRESHOLD**
3" = 1'-0"

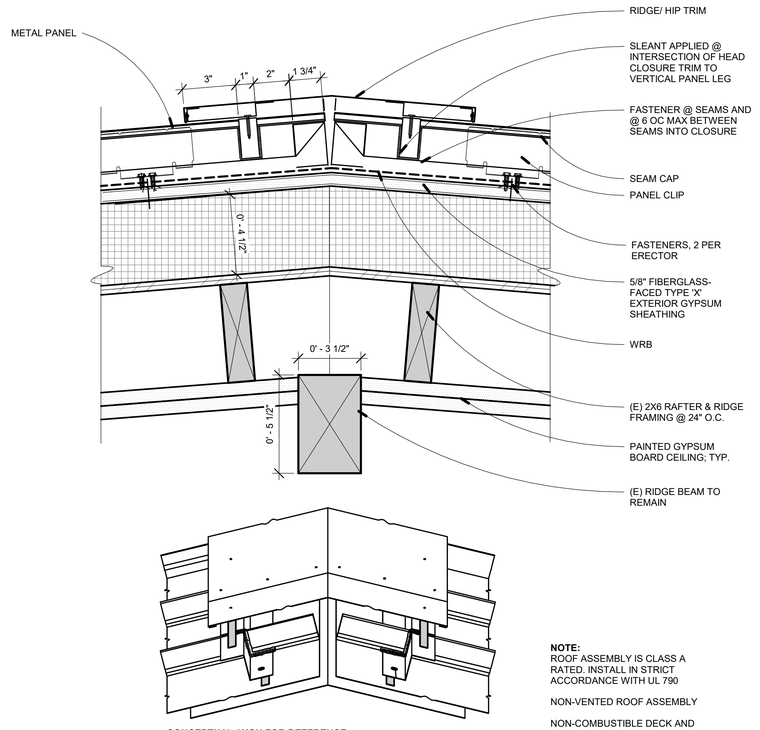

NOTE:
ROOF ASSEMBLY IS CLASS A RATED. INSTALL IN STRICT ACCORDANCE WITH UL 790

NON-VENTED ROOF ASSEMBLY

NON-COMBUSTIBLE DECK AND POLYISOCYANURATE INSULATION IS AN ACCEPTABLE ASSEMBLY UNDER METAL ROOFING

CONCEPTUAL AXON FOR REFERENCE NOT TO SCALE

23 A8.0 **ROOF RIDGE DETAIL**
3" = 1'-0"

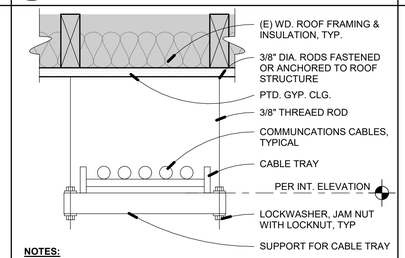

NOTES:

1. SUPPORT SYSTEMS, INCLUDING ALL ASSOCIATED HARDWARE, SHALL BE ANODIZED FOR INTERIOR INSTALLATIONS, STAINLESS STEEL FOR EXTERIOR OR WET AREAS INSTALLATIONS, AND PVC-COATED OR FIBERGLASS FOR HAZARDOUS CLASS II AREAS AND SHALL CONFORMS TO APPLICATION.
2. THE LOWEST POINT OF HORIZONTAL RUN SUPPORT SYSTEM SHALL BE 8'-0" ABOVE FLOOR.

14 A8.0 **TYP. CABLE TRAY SUPPORT**
NOT TO SCALE

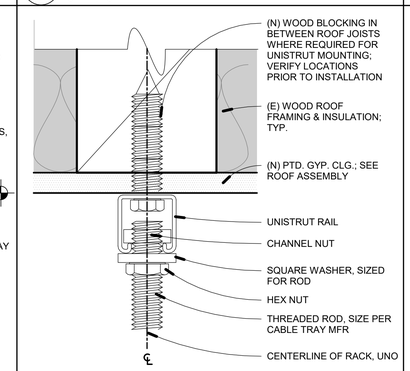

10 A8.0 **UNISTRUT MOUNTING**
6" = 1'-0"

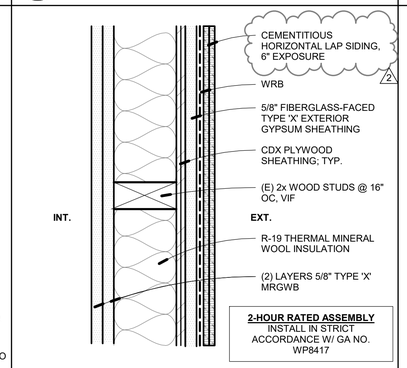

6 A8.0 **WALL ASSEMBLY - TYPE A**
3" = 1'-0"

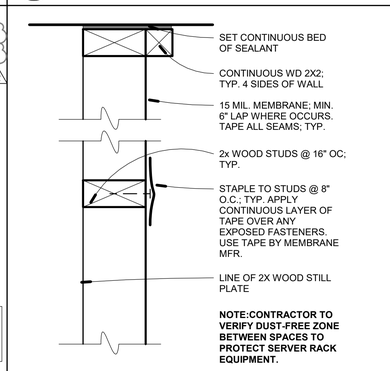

2 A8.0 **WALL ASSEMBLY - TYPE B**
3" = 1'-0"

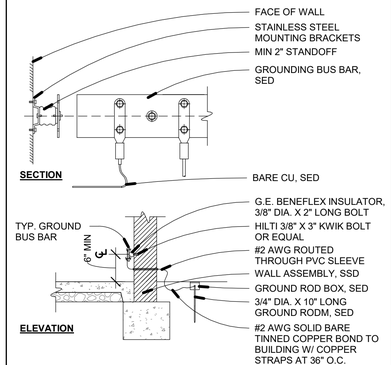

15 A8.0 **TYPICAL GROUND BUS**
NOT TO SCALE

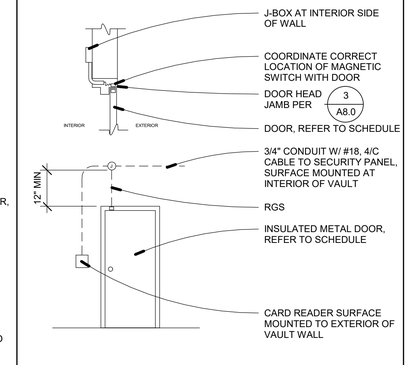

11 A8.0 **DOOR - SECURITY HARDWARE**
NOT TO SCALE

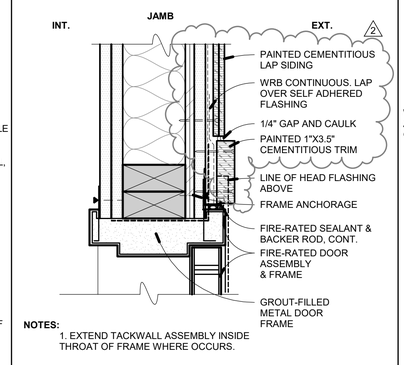

NOTES:
1. EXTEND TACKWALL ASSEMBLY INSIDE THROAT OF FRAME WHERE OCCURS.

7 A8.0 **EXTERIOR DOOR JAMB**
3" = 1'-0"

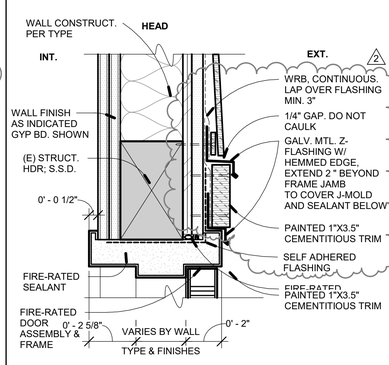

3 A8.0 **EXTERIOR DOOR HEADER**
3" = 1'-0"

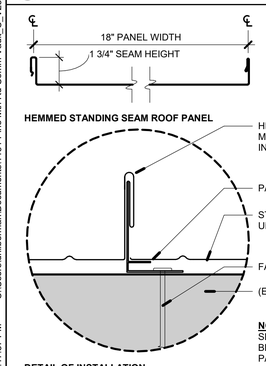

24 A8.0 **TYP. ROOF HEM DETAIL**
6" = 1'-0"

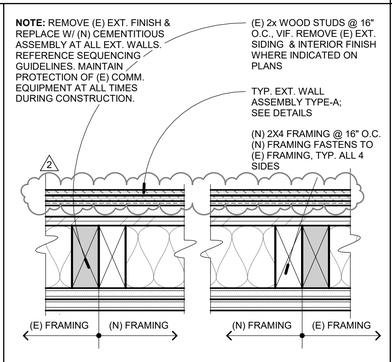

20 A8.0 **TYP. WALL INFILL DETAIL**
3" = 1'-0"

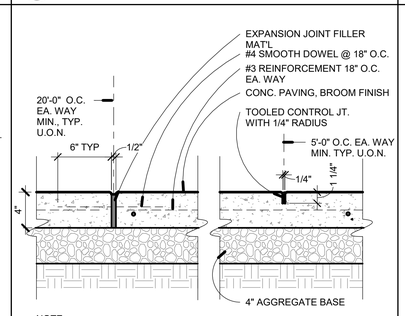

NOTE:
JOINT SPACING AND PATTERN PER PLAN, IF NONE SHOWN PROVIDE CONTROL JOINTS 5'-0" MIN O.C., EXPANSION JOINT SPACING 20'-0" MIN. O.C.

16 A8.0 **SITE CONCRETE WALKWAY**
1 1/2" = 1'-0"

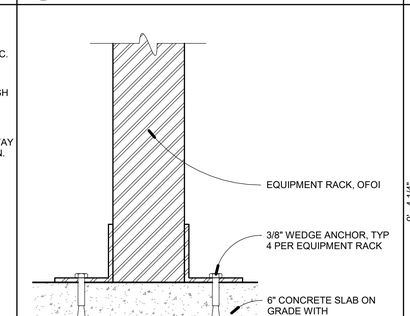

12 A8.0 **EQUIPMENT RACK ANCHOR**
3" = 1'-0"

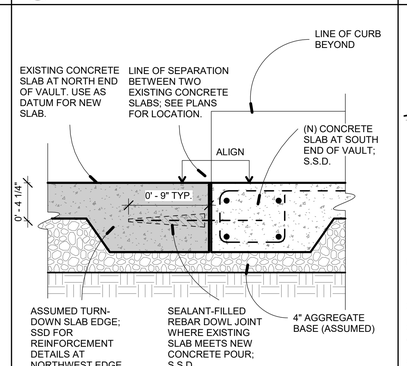

8 A8.0 **CONCRETE SLAB INTERIOR**
1 1/2" = 1'-0"

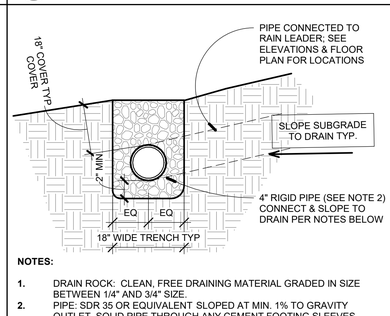

NOTES:

1. DRAIN ROCK: CLEAN, FREE DRAINING MATERIAL GRADED IN SIZE BETWEEN 1/4" AND 3/4" SIZE.
2. PIPE: SDR 35 OR EQUIVALENT SLOPED AT MIN. 1% TO GRAVITY OUTLET. SOLID PIPE THROUGH ANY CEMENT FOOTING SLEEVES.
3. INSTALL CLEAN-OUT PIPE W/ CAP AT UP-SLOPE END OF PIPE.
4. PROVIDE BACKFLOW PREVENTER PRIOR TO CONNECTION TO SITE DRAINAGE PIPING.
5. SEE GEOTECHNICAL REPORT FOR FURTHER INFORMATION.

4 A8.0 **TYPICAL DRAINAGE**
1 1/2" = 1'-0"

AXIA ARCHITECTS
540 Mendocino Ave, Santa Rosa, CA 95401
707 542 4652
axiaarchitects.com

ARCHITECT:

CONSULTANT:

SONOMA COUNTY PUBLIC INFRASTRUCTURE

PINE MOUNTAIN ANTENNA COMMUNICATIONS BUILDING RECONSTRUCTION

33550 PINE MOUNTAIN RD., CLOVERDALE, CA 95425 APN: 117-240-051

SEAL:

Date Stamped: 4/7/2025 Permit # BLD-R01 Plans Examiner: Ronald Morris
REVIEWED FOR CODE COMPLIANCE - PERMIT SONOMA

SHEET LOG

REV #	DATE:	ISSUED FOR:
2	3/24/25	PERMIT RESUBMITTAL

JOB NUMBER: 1191

SHEET:

A8.0

DETAILS

ORIGINAL DATE: 03/24/25

© AXIA ARCHITECTS

3/24/2025 3:17:37 PM C:\Users\dhilberman\Documents\1191 Pine Mtn Rd Comm Vault_C_V25_dhilberman@axiaarchitects.com.rvt

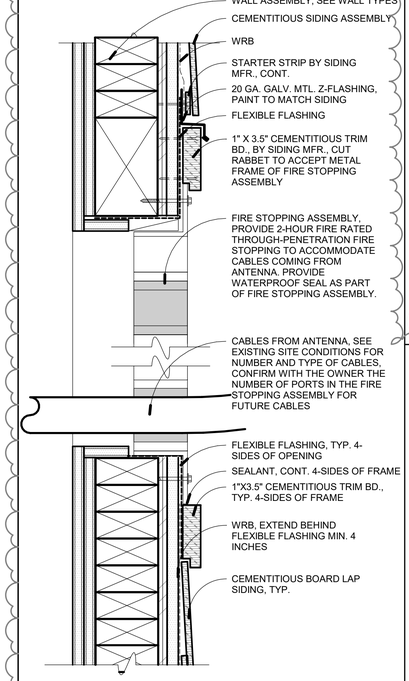

23 / A8.1 FIRE STOP ASSEMBLY @ CABLES
3" = 1'-0"

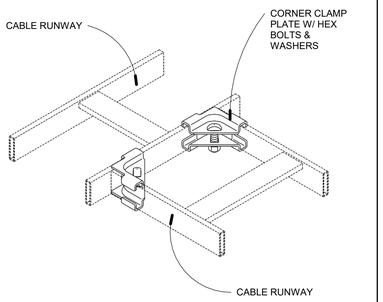

17 / A8.1 CABLE RUNWAY JUNCTION SPLICE
3" = 1'-0"

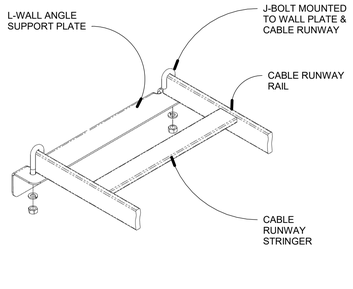

13 / A8.1 CABLE RUNWAY WALL MOUNT DTL.
3" = 1'-0"

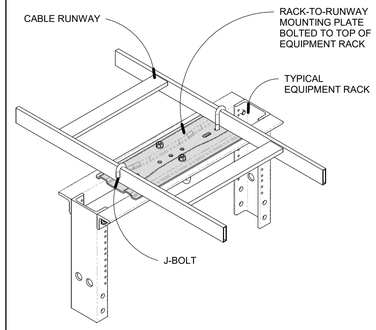

9 / A8.1 CABLE RUNWAY TO RACK DTL.
3" = 1'-0"

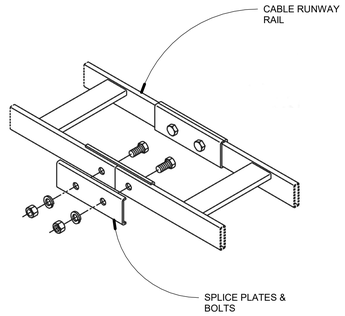

5 / A8.1 CABLE RUNWAY SPLICE DTL.
3" = 1'-0"

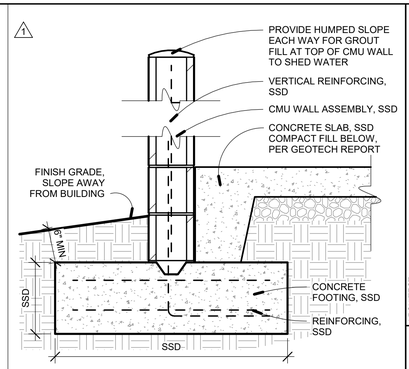

1 / A8.1 CMU WALL FOOTING AT HP
1" = 1'-0"

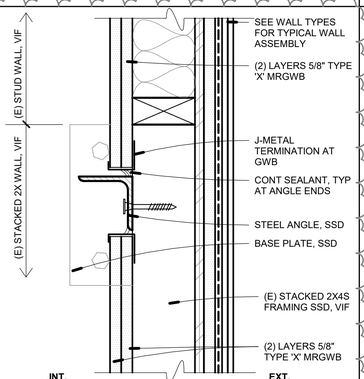

19 / A8.1 WALL @ ANGLE REINFORCEMENT
3" = 1'-0"

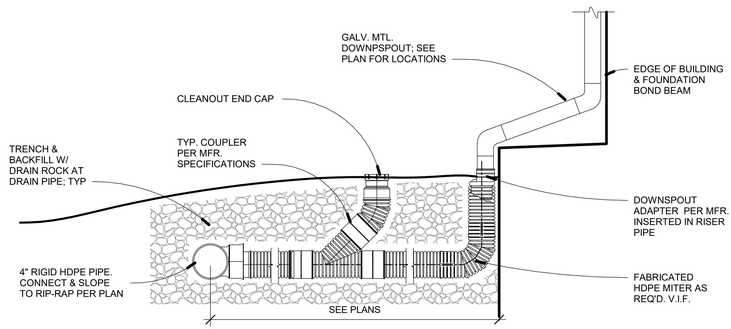

14 / A8.1 TYPICAL DRAINAGE
1 1/2" = 1'-0"

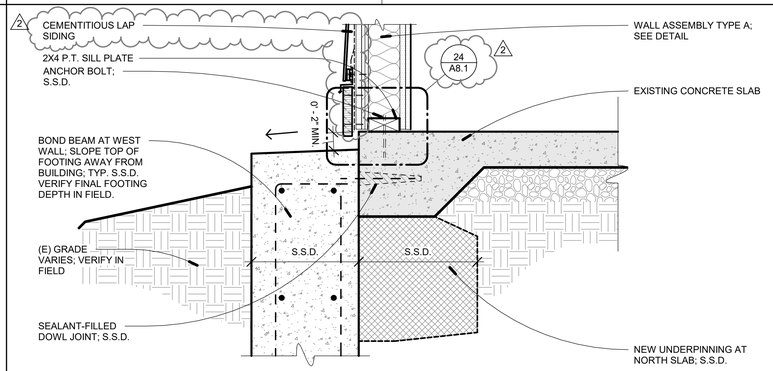

6 / A8.1 CONCRETE SLAB & CURB
1 1/2" = 1'-0"

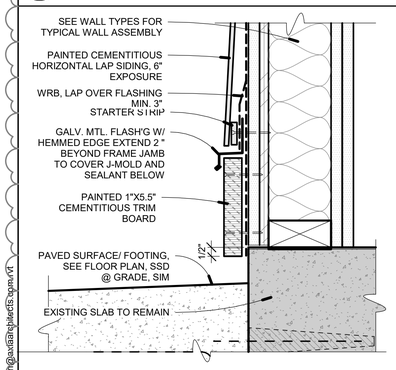

24 / A8.1 SIDING AT BASE
3" = 1'-0"

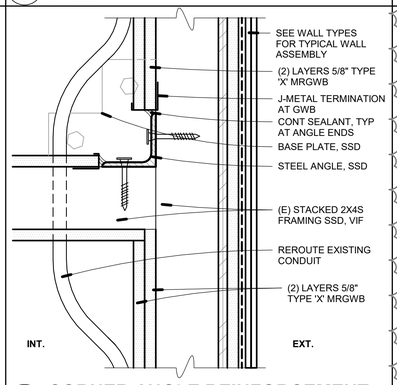

20 / A8.1 CORNER ANGLE REINFORCEMENT
3" = 1'-0"

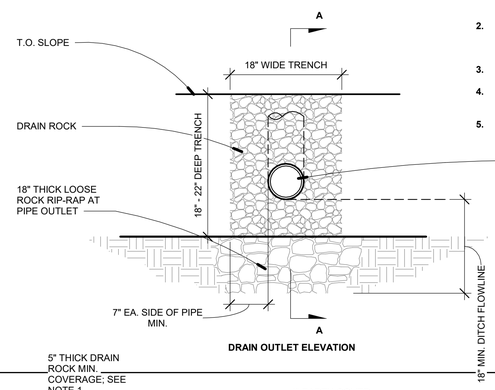

NOTES:

1. DRAIN ROCK: CLEAN, FREE DRAINING MATERIAL GRADED IN SIZE BETWEEN 1/4" AND 3/4" SIZE.
2. PIPE: SDR 35 OR EQUIVALENT SLOPED AT MIN. 1% TO GRAVITY OUTLET. SOLID PIPE THROUGH ANY CEMENT FOOTING SLEEVES.
3. INSTALL CLEAN-OUT PIPE W/ CAP AT UP-SLOPE END OF PIPE.
4. PROVIDE BACKFLOW PREVENTER PRIOR TO CONNECTION TO SITE DRAINAGE PIPING.
5. SEE GEOTECHNICAL REPORT FOR FURTHER INFORMATION.

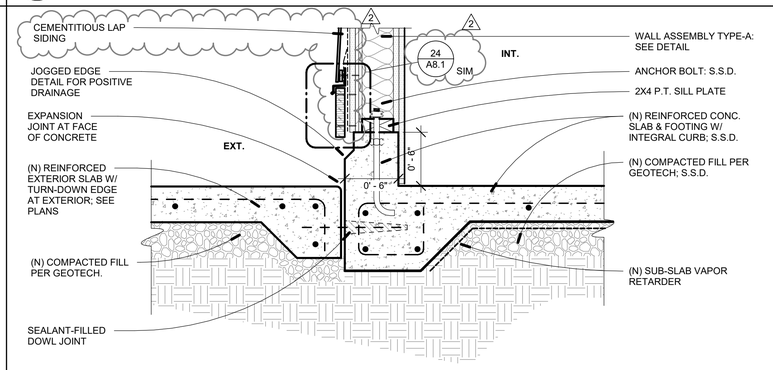

7 / A8.1 CONCRETE SLAB & CURB
1 1/2" = 1'-0"

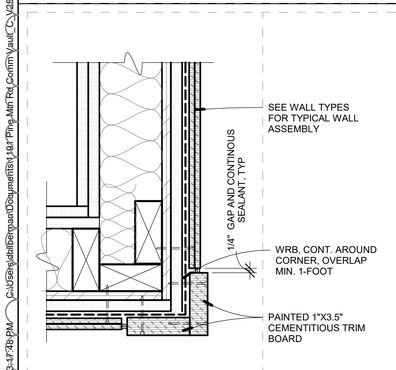

25 / A8.1 OUTSIDE CORNER SIDING DETAIL
3" = 1'-0"

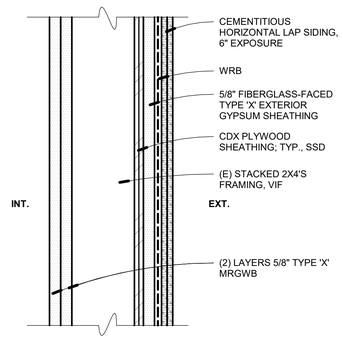

21 / A8.1 WALL ASSEMBLY - TYPE C
3" = 1'-0"

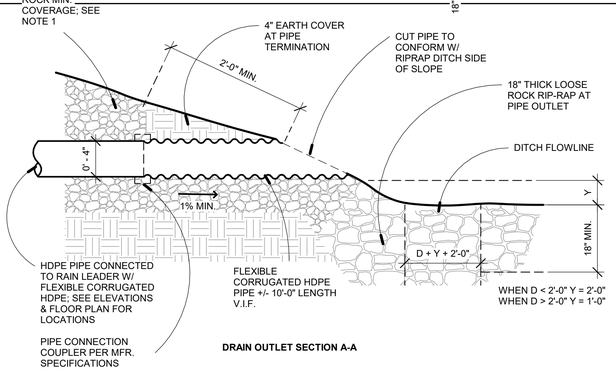

16 / A8.1 TYPICAL DRAINAGE
NOT TO SCALE

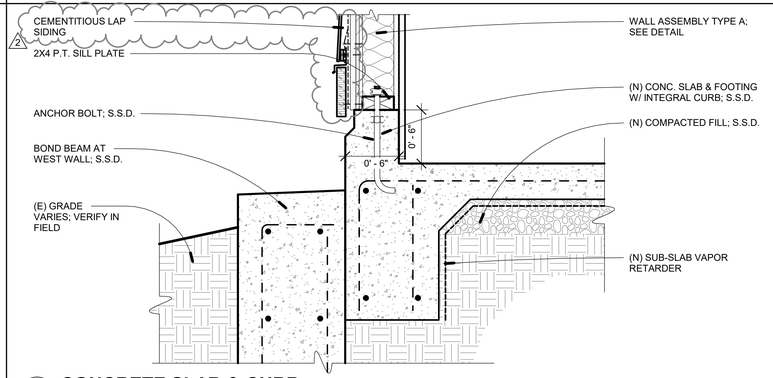

8 / A8.1 CONCRETE SLAB & CURB
1 1/2" = 1'-0"

AXIA ARCHITECTS
540 Mendocino Ave, Santa Rosa, CA 95401
707 542-6652
axiaarchitects.com

ARCHITECT:

CONSULTANT:

SONOMA COUNTY PUBLIC INFRASTRUCTURE

PINE MOUNTAIN ANTENNA COMMUNICATIONS BUILDING RECONSTRUCTION

33550 PINE MOUNTAIN RD., CLOVERDALE, CA 95425 APN: 117-240-051

SEAL:

Date Stamped: 4/7/2025 Permit # BD2025-R01 Plans Examiner: Ronald Morris
REVIEWED FOR CODE COMPLIANCE - PERMIT SONOMA

SHEET LOG

REV #	DATE:	ISSUED FOR:
1	09/19/24	ADDENDUM 01
2	3/24/25	PERMIT RESUBMITTAL

JOB NUMBER: 1191

SHEET:

A8.1

DETAILS

ORIGINAL DATE: 03/24/25

© AXIA ARCHITECTS

3/24/2025 3:47:49 PM C:\USers\dell\Dropbox\Documents\Axia Architects\Projects\2025\1191 Pine Mtn Rd Cloverdale\Revit\1191 Pine Mtn Rd_Cloverdale_R23_DWG.rvt

I STRUCTURAL SPECIFICATIONS

WOOD CONSTRUCTION (CARPENTRY)

1. EACH PIECE OF LUMBER SHALL BEAR THE STAMP OF THE WEST COAST LUMBER INSPECTION BUREAU (WCLIB) OR WESTERN WOOD PRODUCTS ASSOCIATION (WWPA) SHOWING GRADE MARK OR APPROVED EQUAL. BEAMS AND POSTS TO BE FREE OF HEART CENTER (FOHC). OTHER MATERIALS SHALL BE AS SHOWN BELOW:

SAWN LUMBER MEMBER	SPECIES AND MINIMUM GRADE, UNO	F_b (PSI)	F_v (PSI)	E (PSI)
6x POSTS	DOUGLAS FIR - #1	1200	170	$1.6x10^6$
6x BEAMS	DOUGLAS FIR - #1	1350	170	$1.6x10^6$
4x POSTS & BEAMS	DOUGLAS FIR - #1	1000	180	$1.7x10^6$
2x JOISTS, RAFTERS	DOUGLAS FIR - #2	900	180	$1.6x10^6$
℄ MATERIAL	DOUGLAS FIR - #2	900	180	$1.6x10^6$
2x STUDS ≤ 10' HEIGHT	DOUGLAS FIR - STUD	700	180	$1.4x10^6$
2x STUDS > 10' HEIGHT	DOUGLAS FIR - #2	900	180	$1.6x10^6$

2. IT SHALL BE THE RESPONSIBILITY OF THE CONTRACTOR TO ENSURE THE MAXIMUM MOISTURE CONTENT OF WOOD AT THE TIME OF INSTALLATION SHALL BE NOT MORE THAN 19%.

3. NAILS TO BE ASTM F1667 (INCLUDING SUPPLEMENT S1) OF COMMON WIRE AND OF CENTERED FULL-ROUND HEADS WHERE NAILING IS SPECIFIED ON THE DRAWINGS. MACHINE-DRIVEN NAILS MEETING SIZE REQUIREMENTS ARE ACCEPTABLE. NAILS MUST NOT BE OVER-DRIVEN. PRE-DRILL NAIL HOLES WHERE WOOD TENDS TO SPLIT. NAILS AS SPECIFIED ON PLANS AND INCLUDING IN PTDF MATERIAL CONTAINING AMMONIA IN EXTERIOR APPLICATIONS SHALL BE TYPE 304 OR 316 STAINLESS STEEL. NAILS USED IN EXTERIOR APPLICATIONS OR IN INTERIOR PTDF SHALL BE HOT-DIPPED GALVANIZED PER ASTM A153.

WIRE NAIL	MINIMUM SHANK DIAMETER	MINIMUM NAIL LENGTH UNO	MINIMUM HEAD DIAMETER	TYPICAL NAIL APPLICATION, UNO
16d COMMON	0.162"	3½"	0.344"	FRAMING
10d COMMON	0.148"	3"	0.312"	FRAMING
10d COMMON	0.148"	PER 7/S1.2	0.312"	SHEATHING
8d COMMON	0.131"	PER 7/S1.2	0.281"	SHEATHING

4. IT SHALL BE THE RESPONSIBILITY OF THE CONTRACTOR TO ASSURE THAT THE METAL FRAMING CLIPS, HANGERS, ETC. ARE BY SIMPSON STRONG-TIE. NAILING SHALL BE IN ACCORDANCE WITH THE MANUFACTURER'S INSTRUCTIONS WITH A NAIL PROVIDED FOR EACH PUNCHED HOLE UNO. CONNECTORS AS SPECIFIED ON PLANS AND THOSE IN CONTACT WITH PTDF MATERIAL CONTAINING AMMONIA IN EXTERIOR APPLICATIONS SHALL BE TYPE 304 OR 316 STAINLESS STEEL. ALL OTHER CONNECTORS USED IN EXTERIOR APPLICATIONS OR INTERIOR PTDF SHALL BE HDG (MINIMUM 2.0 oz/SQ FT) OR ZMAX (MINIMUM 1.85 oz/SQ FT PER ASTM A653). IN APPLICATIONS WHERE NON-AMMONIA TREATED WOOD IS DRY WHEN INSTALLED AND WILL REMAIN DRY IN-SERVICE A COATING THICKNESS OF 0.9 oz/SQ FT MAY BE USED.

5. WOOD SCREWS SHALL CONFORM TO ANSI/ASME B18.6.1. PROVIDE PILOT HOLE 70% OF DIAMETER OF SCREW SHANK WHERE FASTENING HARDWOOD TIMBER SPECIES OR WHERE WOOD TENDS TO SPLIT. MINIMUM PENETRATION IS (10) DIAMETERS, UNO.

6. BOLTS SHALL BE UNFINISHED MACHINE BOLTS PER ASTM A307. NUTS SHALL BE PER ASTM A563 AND OF STANDARD SIZE UNLESS NOTED OTHERWISE. LENGTH OF BOLTS SHALL BE SUCH THAT THE BOLT PROJECTION IS NOT LESS THAN ⅙" NOR MORE THAN ½" PAST END OF NUT. BOLT HOLES IN WOOD SHALL BE 1/32" LARGER THAN BOLT SIZES (UNO). PROVIDE STANDARD CUT WASHERS UNDER HEAD AND NUT WHERE BOLT HEADS WOULD BEAR ON WOOD. USE MALLEABLE IRON WASHERS WHERE EXPOSED TO VIEW OR NOTED. NUTS SHALL BE TIGHTENED WHEN PLACED AND RETIGHTENED BEFORE CLOSING IN OF WALLS OR OTHER CONSTRUCTION. DO NOT CRUSH WOOD WHEN TIGHTENING. BOLTS AS SPECIFIED ON PLANS AND THOSE IN CONTACT WITH PTDF MATERIAL CONTAINING AMMONIA IN EXTERIOR APPLICATIONS SHALL BE TYPE 304 OR 316 STAINLESS STEEL. ALL OTHER BOLTS USED IN EXTERIOR APPLICATIONS SHALL BE HOT-DIPPED GALVANIZED PER ASTM A153.

7. WOOD AGAINST CMU OR CONCRETE SHALL BE PRESSURE TREATED DOUGLAS FIR (PTDF) PER AWPA STANDARD U1. "USE CATEGORY" UC2 AT INTERIOR. "USE CATEGORY" UC3B AT EXTERIOR (NO GROUND CONTACT). CUT FACES SHALL BE BRUSH TREATED WITH EQUIVALENT PRESERVATIVE PRIOR TO INSTALLATION.

8. DECKING MATERIAL AND FRAMING EXPOSED TO WEATHER TO BE PTDF AWPA "USE CATEGORY" UC3B OR REDWOOD, SAD.

9. WOOD ADHESIVE SHALL BE WATER-PROOF, CARTRIDGE DISPENSED, MEETING APA PRODUCT SPECIFICATION AFG-01 OR ASTM D3498. LOCTITE "PL PREMIUM" OR EQUAL. FOR USE AT SUBFLOOR SHEATHING AND WHERE SPECIFICALLY NOTED FOR USE ON DRAWINGS.

ABBREVIATIONS

AB	ANCHOR BOLT	FTG	FOOTING	PNL	PANEL
ABV	ABOVE	GA	GAGE or GAUGE	PSF	POUNDS PER SQUARE FOOT
AC	AIR CONDITIONING	GALV	GALVANIZED	PSI	POUNDS PER SQUARE INCH
ADJ	ADJACENT	GB	GRADE BEAM	PSL	PARALLEL STRAND LUMBER
ADDL	ADDITIONAL	GL	GRIDLINE	PTDF	PRESSURE TREATED DOUGLAS FIR
ALT	ALTERNATE	GLB	GLUE LAMINATED BEAM	PT	POINT
ALUM	ALUMINUM	GR	GRADE	R	RADIUS
ARCH	ARCHITECT	HD	HOLD DOWN	RBS	REDUCED BEAM SECTION
AYC	ALASKAN YELLOW CEDAR	HDG	HOT-DIP GALVANIZED	RFTR	RAFTER
@	AT	HDR	HEADER	REF	REFERENCE
BF	BRACED FRAME	HGR	HANGER	REINF	REINFORCING
BLDG	BUILDING	HK	HOOK	REQD	REQUIRED
BLK/BLKG	BLOCK/BLOCKING	HORIZ	HORIZONTAL	RET	RETAINING
BLW	BELOW	HSB	HIGH STRENGTH BOLT	REV	REVISION
BM	BEAM	HSG	HIGH STRENGTH GROUT	RF	ROOF
BN	BOUNDARY NAIL	HSH	HORIZONTAL SLOTTED HOLE	RWD	REDWOOD
BOT	BOTTOM	HSS	HOLLOW STRUCTURAL SECTION	S	AMERICAN STANDARD BEAM
BRG	BEARING	HT	HEIGHT	SAD	SEE ARCHITECTURAL DRAWINGS
BTWN	BETWEEN	ID	INSIDE DIAMETER	SB	SOLID BLOCK
BU	BUILT-UP	IJ	I SHAPED WOOD BUILT UP TRUSS	SC	SLIP CRITICAL
BYND	BEYOND	INT	INTERIOR	SCD	SEE CIVIL DRAWINGS
C	AMERICAN STANDARD CHANNEL	JST	JOIST	SCHED	SCHEDULE
CA	CALIFORNIA	JT	JOINT	SED	SEE ELECTRICAL DRAWINGS
CANT	CANTILEVER	KP	KING POST	SEOR	STRUCTURAL ENGINEER OF RECORD
CB	CARRIAGE BOLT	L	STEEL ANGLE	SFRS	SEISMIC FORCE RESISTING SYSTEM
CFS	COLD FORMED STEEL	Lb or #	POUND(s)	SHTG	SHEATHING
CIP	CAST IN PLACE	LGMF	LIGHT GAGE METAL FRAMING	SIM	SIMILAR
CGL	CERTIFIED GLUED LUMBER	LGMFC	LIGHT GAGE METAL FRAMING CONTRACTOR	SKYLT	SKYLIGHT
CJ	CONTROL JOINT	LL	LIVE LOAD	SLD	SEE LANDSCAPE DRAWINGS
℄	CENTERLINE	LLH	LONG LEG HORIZONTAL	SMS	SHEET METAL SCREW
CJP	COMPLETE JOINT PENETRATION	LLV	LONG LEG VERTICAL	SMD	SEE MECHANICAL DRAWINGS
CLG	CEILING	LOC	LOCATION	SOG	SLAB ON GROUND
CLR	CLEAR	LS	LAG SCREW	SPCG	SPACING
COL	COLUMN	LSL	LAMINATED STRAND LUMBER	SPD	SEE PLUMBING DRAWINGS
CONC	CONCRETE	LVL	LAMINATED VENEER LUMBER	SPEC	SPECIFICATION
CONN	CONNECTION	LWC	LIGHTWEIGHT CONCRETE	SQ	SQUARE
CONT	CONTINUOUS	MAX	MAXIMUM	SS	SELECT STRUCTURAL or STAINLESS STEEL
COORD	COORDINATE/ COORDINATION	MB	MACHINE BOLT	STGR	STAGGERED
CMU	CONCRETE MASONRY UNIT	MBM	METAL BUILDING MANUFACTURER	STD	STANDARD
CSK	COUNTERSINK	MC	MISCELLANEOUS CHANNEL	STIFF	STIFFENER
CW	CUT WASHER	MECH	MECHANICAL	STL	STEEL
DBA	DEFORMED BAR ANCHOR	MEZZ	MEZZANINE	STRUCT	STRUCTURAL
DBL	DOUBLE	MF	MOMENT FRAME	SW	SHEAR WALL
DCW	DEMAND CRITICAL WELD	MFR	MANUFACTURER	SYM	SYMMETRICAL
DF	DOUGLAS FIR	MIN	MINIMUM	T&B	TOP AND BOTTOM
DIA or Ø	DIAMETER	MISC	MISCELLANEOUS	T&G	TONGUE AND GROOVE
DIAG	DIAGONAL	MW	MALLEABLE IRON WASHER	THK	THICK
DIM	DIMENSION	MTL	METAL	THRD	THREADED
DIST	DISTANCE	MU	MECH UNIT	THRU	THROUGH
DJ	DOWEL JOINT	(N)	NEW	TL	TOTAL LOAD
DL	DEAD LOAD	N/A	NOT APPLICABLE	TN	TOE NAIL
DN	DOWN	NO or #	NUMBER	TOC	TOP OF CONCRETE
DO	DITTO	NS	NEAR SIDE	TOF	TOP OF FRAMING
DWG	DRAWING	NSG	NON-SHRINK GROUT	TOM	TOP OF MASONRY
DWL	DOWEL	NTS	NOT TO SCALE	TOP	TOP OF PLYWOOD
EA	EACH	NWC	NORMAL-WEIGHT CONCRETE	TOS	TOP OF STEEL
EE	EACH END	O/	OVER	TOT	TOTAL
EF	EACH FACE	oc	ON CENTER	TU	TILT UP
ELEC	ELECTRICAL	OD	OUTSIDE DIAMETER	TYP	TYPICAL
ELEV	ELEVATOR/ELEVATION	OH	OPPOSITE HAND	UNO	UNLESS NOTED OTHERWISE
EMBED	EMBEDMENT	OPNG	OPENING	VERT	VERTICAL
EQ	EQUAL	OPP	OPPOSITE	VIF	VERIFY IN FIELD
EQUIP	EQUIPMENT	OVS	OVERSIZED	VSH	VERTICAL SLOTTED HOLE
ES	EACH SIDE	OW	OTHERWISE	W	WIDE FLANGE STEEL BEAM
EW	EACH WAY	OWT	OPEN WEB TRUSS	W/	WITH
(E)	EXISTING	P	PLATE or PROPERTY LINE	W/O	WITHOUT
EXP	EXPANSION	PA	POST ABOVE	WD	WOOD
EXT	EXTERIOR	PAF	POWER ACTUATED FASTENERS	WHS	WELDED HEADED STUD
FDN	FOUNDATION	PEN	PANEL EDGE NAIL	WLD	WELDED
FIN	FINISH	PERP	PERPENDICULAR	WP	WORK POINT/WATERPROOF
FG	FINISH GRADE	PES	PANEL EDGE SCREWS	WS	WOOD SCREW
FLR	FLOOR	PJP	PARTIAL JOINT PENETRATION	WT	WEIGHT
FN	FACE NAIL	PLF	POUNDS PER LINEAR FOOT	WTS	WELDED THREADED STUD
FOC	FACE OF CONCRETE			WWR	WELDED WIRE REINFORCEMENT
FOM	FACE OF MASONRY				
FOS	FACE OF STUD				
FRMG	FRAMING				
FS	FAR SIDE				

CONCRETE CONSTRUCTION

1. CONCRETE SHALL MEET THE FOLLOWING REQUIREMENTS:

LOCATION	MIN 28-DAY STRENGTH (PSI)	AGGREGATE SIZE	MAX WATER TO CEMENTITIOUS MATERIALS RATIO	MIN SACKS CEMENTITIOUS MATERIAL PER CUBIC YARD[4]
STRUCTURAL				
INTERIOR SLAB ON GROUND[3]	3,000	1"x#4	0.45	6.1
FOUNDATIONS (INCLUDING STEM WALLS)	3,000	1"x#4	0.53	5.0
TOPPING SLAB	4,000	¾"x#4	0.46	6.0
NON-STRUCTURAL				
LEAN CONC FOR FTG BACKFILL	-	-	-	3.0

2. CONCRETE MIX DESIGN AND TESTING SHALL MEET THE REQUIREMENTS OF CBC SECTIONS 1705 AND 1903, ACI CODE-318, ACI SPEC-301, AND THESE SPECIFICATIONS. SUBMIT MIX DESIGN AND SUPPORTING DOCUMENTATION IN ACCORDANCE WITH ACI SPEC-301 AND ACI CODE-318 FOR REVIEW PRIOR TO PLACEMENT.

CEMENT:	ASTM C150 TYPE II
AGGREGATE:	ASTM C33
FLY ASH:	ASTM C618 CLASS F
SLAG CEMENT:	ASTM C989 GRADE 100 OR 120
WATER:	ASTM C1602
ADMIXTURES:	ASTM C494, C260

3. CONCRETE MIX DESIGN FOR INTERIOR SLABS ON GROUND TO HAVE 25% TO 35% FLY ASH OR 30% TO 45% SLAG CEMENT SUBSTITUTED FOR CEMENT AT A POUND-FOR-POUND RATE. REPLACE 200 POUNDS OF SAND WITH 200 POUNDS ⅜"(-) AGGREGATE TO REDUCE TOTAL SAND.

4. FLY ASH MAY BE SUBSTITUTED UP TO 25% FOR CEMENT AT A POUND-FOR-POUND RATE, UNLESS SPECIFIED OTHERWISE. DO NOT USE FLY ASH IN HIGH EARLY STRENGTH CONCRETE. SLAG CEMENT MAY BE SUBSTITUTED UP TO 45% FOR CEMENT AT A POUND-FOR-POUND RATE, UNLESS SPECIFIED OTHERWISE. DO NOT USE SLAG CEMENT IN HIGH EARLY STRENGTH CONCRETE.

5. UNDER SLAB VAPOR RETARDER TO BE ASTM E1745 CLASS A; 15 MILS MINIMUM THICKNESS; 0.01 U.S. PERMS MAXIMUM PERMEANCE. INSTALL PER ASTM E1643 AND MANUFACTURER'S RECOMMENDATIONS. PROVIDE "STEGO WRAP VAPOR BARRIER (15MIL)" OR APPROVED EQUIVALENT. RETARDER SHALL EXTEND TO FOOTINGS BUT NOT TO BOTTOM OF FOOTING OR INTO A COLD JOINT.

6. REINFORCING STEEL SHALL CONFORM TO ASTM A615 GRADE 60 OR A706 GRADE 60. STEEL SHALL BE KEPT CLEAN AND FREE OF RUST. SECURELY TIE REBAR IN PLACE PRIOR TO CONCRETE PLACEMENT. SUBMIT SHOP DRAWINGS FOR REVIEW PRIOR TO INSTALLATION. WELDED REINFORCING STEEL SHALL BE ASTM A706 OR A615 MEETING CARBON REQUIREMENTS OF AWS D1.4. WELDING SHALL CONFORM WITH AWS D1.4. WELDED WIRE REINFORCEMENT SHALL CONFORM WITH ASTM A1064 AND SHALL BE LAPPED 12" MINIMUM.

7. CONCRETE SHALL BE KEPT CONTINUOUSLY WET FOR 48 HOURS, AFTER PLACEMENT, AND SHALL BE KEPT DAMP FOR 7 DAYS AFTER PLACEMENT. IN LIEU OF PONDING, SLABS EITHER MAY HAVE CURE/SEALER APPLIED IMMEDIATELY AFTER FINISHING (IF OTHER FINISHES ARE NOT AFFECTED) OR COVERED WITH CURING PAPER, FILM OR BURLAP. CURE SHALL BE OF A TYPE THAT WILL NOT BE DETRIMENTAL TO SEALERS TO BE APPLIED LATER.

8. ANCHOR BOLTS - ASTM F1554 GRADE 36 THREADED ROD WITH DOUBLE NUTS OR ASTM A307 HEADED BOLTS. (NO "J" OR "L" BOLTS EXCEPT AT WOOD SILL PLATES). SECURELY TIE ANCHOR BOLTS IN PLACE PRIOR TO CONCRETE POUR.

9. WHERE INDICATED ON THE ARCHITECTURAL DRAWINGS AT TOPPING SLABS, XYPEX CHEMICAL CORPORATION "XYPEX ADMIX C-500" SHALL BE USED PER MANUFACTURER'S RECCOMENDATIONS.

CONCRETE MASONRY CONSTRUCTION (CMU)

1. CONCRETE MASONRY UNITS SHALL BE MEDIUM-OR LIGHT-WEIGHT CONFORMING TO ASTM C90, LATEST VERSION. UNITS TO BE DOUBLE OPEN END WHERE POSSIBLE AND SINGLE OPEN END OTHERWISE. ALL CELLS TO BE GROUTED SOLID. COMPRESSIVE STRENGTH OF MASONRY AT 28 DAYS, F'_m, SHALL BE 1,500 PSI.

2. GROUT TYPE SHALL BE COURSE CONFORMING TO ASTM C476, LATEST VERSION, HAVING A COMPRESSIVE STRENGTH OF 2,000 PSI MINIMUM IN 28 DAYS AND SHALL HAVE MINIMUM 6 SACKS OF CEMENT PER CUBIC YARD. ADD 1 POUND SIKA GROUT AID PER SACK OF CEMENT UP TO 6 POUNDS MAXIMUM PER CUBIC YARD.

3. MORTAR SHALL BE 1800 PSI MINIMUM TYPE M OR S CONFORMING TO ASTM C270, LATEST VERSION, AND PROPORTIONED TO OR WITH PROPERTY SPECIFICATIONS PER 2010 CBC SECTION 2103.

4. THE MINIMUM LAP SPLICE SHALL BE PER DRAWINGS. ALL STEEL, INCLUDING EMBEDS, SHALL BE POSITIONED AND TIED.

5. GROUT SHALL BE PLACED IN 48" LIFTS MAXIMUM WITHOUT CLEAN OUTS. MAXIMUM LIFT IS 8'-0" WITH CLEAN OUTS. GROUT FOR EACH POUR SHALL BE STOPPED 1½" BELOW THE TOP OF THE LAST COURSE OF BLOCK. ALL GROUT TO BE THOROUGHLY CONSOLIDATED BY VIBRATING IMMEDIATELY AFTER.

F WOOD FRAMING NOTES

1. HEADERS, BEAMS, POSTS, TOP PLATE SPLICES, AND ETC., ARE PER 1/S1.2 AND 6/S1.2 WHERE NOT NOTED ON PLAN AND DETAILS. WALLS AT SEISMIC SEPARATIONS SHALL BE CONSIDERED EXTERIOR WALLS.

2. ALL BEAMS AND JOISTS (EXCLUDING I JOISTS) SHALL BE SEAT CUT FOR FULL UNIFORM BEARING AT SUPPORTS, INCLUDING BEAM SEATS AND COLUMN CAPS.

3. 3½" AND 5½" WIDTHS MAY BE SUBSTITUTED FOR 3⅝" & 5⅛" WIDTHS, RESPECTIVELY, AT INDUSTRIAL APPEARANCE GRADE GLULAM MEMBERS UNO.

4. SEE 7/S1.2 FOR SHEATHING NAILING REQUIREMENTS. ALL NAILING NOT NOTED OR DETAILED OTHERWISE SHALL BE PER 8/S1.2 , NAIL LENGTH TO BE SUFFICIENT TO MEET CBC PENETRATION REQUIREMENTS. NAILS INTO PRESSURE TREATED MATERIAL SHALL BE HOT DIP GALVANIZED. NAILS AT BORATE TREATED LUMBER MAY BE CLEAR ZINC COATED. SEE SPECIFICATIONS FOR ADDITIONAL REQUIREMENTS AT EXTERIOR EXPOSURES.

5. EXTERIOR STUD WALL SHALL BE 2x6 @ 16"oc UNLESS NOTED OTHERWISE. INTERIOR BEARING WALLS AND SHEAR WALLS SHALL BE 2x6 @ 16"oc UNLESS NOTED OTHERWISE. SEE ARCHITECTURAL DRAWINGS FOR OTHER INTERIOR WALL FRAMING SIZES. COORDINATE STUD AND PLATE SIZES WITH THE REQUIREMENTS OF THE SHEAR WALL SCHEDULE.

6. WOOD POST SIZES ARE TO MATCH BEAM AND STUD WIDTH, UNO. WHERE POST OCCURS ABOVE RAISED FLOOR, PROVIDE SOLID BLOCKING AT FLOOR FRAMING TO MATCH WIDTH OF POST. PEN PER G/S0.1 TO POSTS AT ALL EXTERIOR WALLS AND INTERIOR SHEAR WALLS. POSTS AT HOLDOWNS TO BE FULL HEIGHT AND PER 9/S1.2 OR 10/S1.2 .

7. FOR ROOF DRAINAGE, TOP OF FRAMING BETWEEN NOTED POINTS IS A STRAIGHT LINE.

8. ALL MECHANICAL SUPPLY AND RETURN OPENINGS TO BE BETWEEN FRAMING UNO.

9. THE CONTRACTOR SHALL VERIFY THAT THE MOISTURE CONTENT OF ALL FRAMING LUMBER AND SHEATHING MEET THE REQUIREMENTS OF THE SPECIFICATIONS AT THE TIME OF INSTALLATION AND AT CLOSE-IN. THE CONTRACTOR SHALL PROVIDE ALLOWANCE FOR DIFFERENTIAL SHRINKAGE BETWEEN FLOORS, ETC.

G SHEAR WALL NOTES

1. PEN = PLYWOOD/OSB SHEATHING EDGE NAILING. BLOCK ALL UNSUPPORTED EDGES WITH 2x MATERIAL UNO. BLOCK EDGES WITH 3x MATERIAL WHERE NAILING IS 4"oc OR LESS.

2. FIELD NAILING TO BE 12"oc UNO.

3. ALL SHEATHING NAILS TO BE COMMON WIRE. SEE F/S0.1 AND SPECIFICATIONS FOR OTHER NAIL REQUIREMENTS.

4. ALL EXTERIOR WALLS NOT DESIGNATED AS SHEAR WALLS ON PLANS TO HAVE SHEATHING AND PEN NAILING PER SHEAR WALL TYPE 'A'.

5. SHEAR WALL LENGTHS, WHERE NOTED, ARE MINIMUM. DO NOT LOCATE HOLDOWNS FROM THESE DIMENSIONS. SAD FOR ACTUAL WALL LENGTHS.

6. EDGE NAIL WALL SHEATHING TO STUDS OR POSTS WITH HOLDOWNS.

7. SHEAR WALLS MORE THAN ONE VERTICAL PANEL IN HEIGHT SHALL HAVE STAGGERED HORIZONTAL OR VERTICAL SPLICE JOINTS.

8. ANCHOR BOLTS (AB) FOR SHEAR WALLS SHALL INCLUDE STEEL PLATE WASHERS, A MINIMUM OF 0.229 INCH BY 3 INCHES SQUARE IN SIZE, BETWEEN THE SILL PLATE AND NUT. THE HOLE IN THE PLATE WASHER IS PERMITTED TO BE DIAGONALLY SLOTTED WITH A WIDTH OF UP TO 3/16" LARGER THAN THE AB DIAMETER AND A SLOT LENGTH NOT TO EXCEED 1¾", PROVIDED A STANDARD CUT WASHER IS PLACED BETWEEN THE PLATE WASHER AND THE NUT. PLATE WASHER TO EXTEND WITHIN ½" OF SHEAR WALL SHEATHING UNO. PROVIDE OVERSIZED PLATE WASHER OR OFFSET AB AS REQUIRED. AT DOUBLE-SIDED SHEAR WALLS, STAGGER AB AS REQUIRED. AB TO BE PLACED A MINIMUM OF 4½" AND A MAXIMUM OF 12" FROM ENDS OF ALL SILL PLATES AND AT NOTCHES IN SILL PLATES.

SHEAR WALL SCHEDULE

SW	APA RATED SHEATHING	NAILING (PEN)	ANCHORAGE: ½"Ø BOLT FDN 2x SILL	½"Ø BOLT FDN 3x SILL	AT FRAMING 16d	AT FRAMING A35	AT FRAMING SDS *	REMARKS
Ⓐ	15/32" (32/16) EXP 1	10d @ 6"oc	48"oc	48"oc	8"oc	24"oc	18"oc	
Ⓑ	15/32" (32/16) EXP 1	10d @ 4"oc	32"oc	32"oc	6"oc	16"oc	12"oc	

H CONCRETE MASONRY UNIT NOTES

1. CONCRETE MASONRY UNIT CONSTRUCTION SHALL BE PER 7/S1.1 UNO. USE DOUBLE OPEN END WHERE POSSIBLE AND SINGLE OPEN END OTHERWISE. ALL CELLS TO BE GROUTED SOLID. ALL CMU TO BE LAID IN RUNNING BOND.

2. PROVIDE INVERTED BOND BEAM UNITS AT FOUNDATION LEVEL. SEE SPECIFICATIONS FOR CLEANOUT AND GROUTING REQUIREMENTS.

3. DOWELS FROM FOUNDATION ARE TO MATCH SIZE AND ALIGNMENT WITH THE WALL VERTICAL REINFORCEMENT. EXTEND DOWELS FROM FOUNDATION INTO WALL TO PROVIDE MINIMUM LAP WITH WALL VERTICAL REINFORCEMENT. INSTALL DOWEL BARS PER PLAN AND 7/S1.1 ALL DOWELS TO EXTEND TO THE LOWEST FOUNDATION REINFORCEMENT AND END WITH A STANDARD HOOK.

4. PROVIDE (2) #5 IN BOND BEAM UNITS AT THE TOPS OF ALL WALLS, UNO.

5. SAD FOR TYPE OF FINISH, LOCATION, COLOR, ETC. SEE SPECIFICATIONS OTHERWISE.

D SPECIAL INSPECTION BY OWNERS TESTING AGENCY

SPECIAL INSPECTIONS AND TESTING SHALL BE PERFORMED BY AN APPROVED AGENCY IN ACCORDANCE WITH CBC CHAPTER 17 AND THE STATEMENT OF SPECIAL INSPECTIONS AS REQUIRED BY CBC SECTIONS 1704.2.3 AND 1704.3 FOR BUILDING STRUCTURAL ELEMENTS SUMMARIZED AS FOLLOWS:

1. **SPECIAL CASES** PER CBC SECTION 1705.1.1 AND PRODUCT ICC REPORTS FOR ALL STRUCTURAL MATERIALS AND SYSTEMS REQUIRED TO BE INSTALLED IN ACCORDANCE WITH ADDITIONAL MANUFACTURER'S INSTRUCTIONS THAT PRESCRIBE REQUIREMENTS NOT CONTAINED IN THE CBC OR REFERENCED STANDARDS INCLUDING POST-INSTALLED ANCHOR BOLTS IN CONCRETE.

2. **WOOD CONSTRUCTION** PER CBC SECTIONS 1705.5, 1705.12.1, AND 1705.13.2 INCLUDING NAILING, BOLTING, AND ANCHORING OF ALL DRAG STRUTS; TOP PLATE SPLICES, LEDGER SPLICES, SIMPSON HARDWARE, BRACES, AND HOLDOWNS; AND NAILING, BOLTING, AND ANCHORING OF ALL SHEAR WALLS, SHEAR PANELS, AND DIAPHRAGMS WHERE THE FASTENER SPACING OF THE SHEATHING IS 4" APART OR LESS.

E EXISTING CONSTRUCTION NOTES

1. ORIGINAL CONSTRUCTION DRAWINGS WERE NOT AVAILABLE FOR REVIEW AT THE TIME THESE DOCUMENTS WERE PREPARED. EXISTING BUILDING CONDITIONS SHOWN ARE ASSUMED BASED ON INFORMATION PROVIDED BY OTHERS AND ASSUMPTIONS BASED ON PROBABLE CONSTRUCTION METHODS. ACTUAL FIELD CONDITIONS MAY VARY.

2. ALL WORK NOT INDICATED AS EXISTING (E) SHALL BE ASSUMED TO BE NEW (N).

3. ANY REMOVAL, CUTTING, DRILLING, ETC OF EXISTING WORK SHALL BE PERFORMED WITH GREAT CARE. SMALL TOOLS SHALL BE USED IN ORDER NOT TO JEOPARDIZE THE STRUCTURAL INTEGRITY OF THE STRUCTURE. IF STRUCTURAL MEMBERS OR MECHANICAL, ELECTRICAL, OR ARCHITECTURAL ELEMENTS NOT INDICATED FOR REMOVAL INTERFERE WITH THE NEW WORK, THE ARCHITECT/ENGINEER SHALL BE IMMEDIATELY NOTIFIED AND PRIOR APPROVAL SHALL BE OBTAINED BEFORE REMOVAL OF THE MEMBERS.

4. DO NOT OVER CUT EXISTING WOOD, CONCRETE, MASONRY OR OTHER WORK TO REMAIN. CUTS SHALL BE MADE NEATLY TO A CORNER, THEN ALTERNATE MEANS SHALL BE USED TO REMOVE REMAINING MATERIAL. CONTRACTOR IS RESPONSIBLE FOR REPAIR/REPLACEMENT OF OVER CUT MATERIAL AS DIRECTED BY THE ARCHITECT AND/OR ENGINEER.

5. EXISTING DAMAGED STRUCTURAL MEMBERS WHICH ARE UNCOVERED SHALL BE REPORTED TO THE ARCHITECT/ENGINEER FOR REVIEW AND REPAIR.

6. EXISTING CONCRETE SURFACE ABUTTING NEW CONCRETE SHALL BE ROUGHENED TO ¼" AMPLITUDE AND THOROUGHLY CLEANED OF DUST, LOOSE AGGREGATE, LAITANCE, ETC.

7. EXISTING REINFORCING AND/OR STEEL EMBEDS THAT ARE EXPOSED DURING DEMOLITION SHALL BE WIRE-BRUSHED AND FOREIGN MATERIAL REMOVED PRIOR TO PLACEMENT OF NEW CONCRETE.

8. REMODELING REQUIRES ASSUMPTIONS BE MADE REGARDING EXISTING CONDITIONS WHICH MAY NOT BE VERIFIABLE WITHOUT DESTROYING OTHERWISE ADEQUATE OR SERVICEABLE PORTIONS OF THE STRUCTURE. THIS ANALYSIS DOES NOT MAKE ANY GUARANTEE TO THE ADEQUACY OF THE STRUCTURAL DESIGN OF THE EXISTING BUILDING NOT SPECIFICALLY ADDRESSED IN THE STRUCTURAL CALCULATIONS. ZFA SHALL NOT BE RESPONSIBLE FOR UNSATISFACTORY PERFORMANCE OF EXISTING PORTIONS OF THE STRUCTURE NOT SPECIFICALLY ADDRESSED IN THE CONSTRUCTION DOCUMENTS.

A DESIGN CRITERIA

DESIGN CRITERIA: 2022 CALIFORNIA CODE OF REGULATIONS, TITLE 24, PART 2 (CBC)
FLOOR LIVE LOAD: 40 PSF (REDUCIBLE)
ROOF LIVE LOAD: 20 PSF (REDUCIBLE)
FUTURE SOLAR: 3 PSF
RISK CATEGORY: IV
WIND DATA: ULTIMATE WIND SPEED (3 SEC GUST) IN MPH: 95
WIND EXPOSURE: C
INTERNAL WIND PRESSURE COEFFICIENT (GCPI) = ±0.18
COMPONENTS AND CLADDING DESIGN PRESSURES FOR SYSTEMS DESIGNED BY OTHERS SHALL COMPLY WITH THE "ASCE 7-16" DESIGN STANDARD
EARTHQUAKE DATA: SEISMIC IMPORTANCE FACTOR, I_e: 1.5
MAPPED SPECTRAL RESPONSE ACCELERATIONS: S_S = 2.50; S_1 = 0.939
SITE CLASS: C
SPECTRAL RESPONSE COEFFICIENTS: S_{DS} = 2.00; S_{D1} = 0.876
DESIGN CATEGORY: F
SEISMIC FORCE RESISTING SYSTEM(S): WOOD FRAMED SHEAR WALL
RESPONSE MODIFICATION FACTOR(S): R = 6.5
SEISMIC RESPONSE COEFFICIENT(S), C_S: 0.308 (ULTIMATE)
ANALYSIS PROCEDURE USED: EQUIVALENT LATERAL FORCE

B GENERAL NOTES

1. REFER TO SHEETS S1.1 AND S1.2 FOR STANDARD DETAILS OF CONSTRUCTION. REFER TO THE PROJECT SPECIFICATIONS FOR MATERIALS AND METHODS.

2. BUILDING DIMENSIONS SHOWN ARE FOR GENERAL REFERENCE ONLY. SEE ARCHITECTURAL DRAWINGS (SAD) FOR ALL ACTUAL BUILDING DIMENSIONS. ANY DISCREPANCIES ARE TO BE BROUGHT TO THE ATTENTION OF THE ARCHITECT/ENGINEER SO CLARIFICATION CAN BE MADE PRIOR TO COMMENCING WORK.

3. STRUCTURAL DRAWINGS SHALL NOT BE SCALED. ALL DIMENSIONS AND FIT SHALL BE DETERMINED AND VERIFIED BY THE CONTRACTOR PRIOR TO COMMENCING WORK.

4. DETAILS NOT FULLY OR SPECIFICALLY SHOWN SHALL BE OF SAME NATURE AS OTHER SIMILAR CONDITIONS.

5. REFER TO ARCHITECTURAL DRAWINGS FOR SIDEWALK SLABS AND DIMENSIONS.

6. COORDINATION OF MECHANICAL, ELECTRICAL, PLUMBING, AND SITE UTILITY SYSTEMS WITH THE STRUCTURAL SYSTEM IS THE RESPONSIBILITY OF THE GENERAL CONTRACTOR. USE DETAILS ON SHEETS S1.1 THROUGH S1.2. AT CONDITIONS WHERE THESE DETAILS DO NOT APPEAR TO APPLY, NOTIFY THE STRUCTURAL ENGINEER PRIOR TO INSTALLATION. AT CONDITIONS WHERE FIELD MODIFICATIONS OF MECHANICAL, ELECTRICAL, PLUMBING, OR SITE UTILITIES AFFECT STRUCTURAL SYSTEMS, NOTIFY STRUCTURAL ENGINEER PRIOR TO INSTALLATION.

7. VERIFY WEIGHTS AND LO

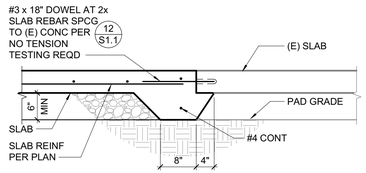

10 NEW SLAB TO EXISTING SLAB
3/4" = 1'-0"

SCREW ANCHOR IN 2500 PSI MIN CONCRETE							
ANCHOR TYPE	ANCHOR AND PILOT HOLE DIA	MINIMUM EMBEDMENT H_{nom}	MINIMUM EDGE DIST C_{min}	MINIMUM SPCG S_{min}	MINIMUM CONCRETE THICKNESS H_{min}	MINIMUM INSTALL TORQUE (FT-LB)	MAXIMUM INSTALL TORQUE (FT-LB)
SIMPSON TITEN HD (ICC-ESR 2713)	¼"	1⅜"	1½"	1½"	3¼"	10	24
	⅜"	2½"	1¾"	3"	4"	10	50
	½"	3¼"	1¾"	3"	5"	10	65
	⅝"	4"	1¾"	3"	6"	10	100
	¾"	5½"	1¾"	3"	8¾"	20	150
HILTI KH-EZ (ICC-ESR 3027)	¼"	1⅜"	1½"	1½"	3¼"	10	18
	⅜"	2½"	1½"	3"	4"	10	40
	½"	3"	1¾"	3"	4¾"	10	45
	⅝"	3¼"	1¾"	4"	5"	10	85
	¾"	4"	1¾"	4"	6"	20	95

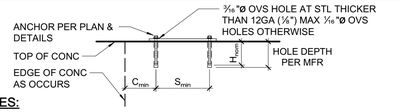

NOTES:

1. INSTALL SCREW ANCHORS PER MANUFACTURER'S INFORMATION AND ICC REPORT INSTRUCTIONS. SPECIAL INSPECTION IS REQUIRED PER SECTION 1705 OF THE CBC AND THE REQUIREMENTS OF THE ICC REPORTS. INSTALLED ANCHORS SHALL BRING CONNECTED PLIES INTO FIRM CONTACT, MEETING THE INSTALL TORQUE BUT NOT EXCEEDING THE MAXIMUM INSTALL TORQUE.
2. CONTRACTOR TO VERIFY MINIMUM EDGE DISTANCES, SPACING AND THICKNESS ARE IN ACCORDANCE W/ SCHEDULE PRIOR TO INSTALLING ANCHOR.
3. HOLES TO BE DRILLED W/ ROTARY DRILL ONLY. WHEN INSTALLING DRILLED-IN ANCHORS IN EXISTING REINFORCED CONCRETE, USE CARE AND CAUTION TO AVOID CUTTING OR DAMAGING THE EXISTING REINFORCING BARS. MAINTAIN A REASONABLE CLEARANCE BETWEEN REINFORCEMENT AND THE DRILLED-IN ANCHOR. FILL ABANDONED HOLES W/ HIGH STRENGTH GROUT.
4. THE SPECIAL INSPECTOR SHALL PERFORM PERIODIC/CONTINUOUS INSPECTION IN ACCORDANCE WITH TABLE 1705.3. THE SPECIAL INSPECTOR SHALL INSPECT ANCHOR TYPE, ANCHOR DIMENSIONS, HOLE CLEANLINESS, EMBEDMENT DEPTH, CONCRETE TYPE, CONCRETE COMPRESSIVE STRENGTH, DRILL BIT DIAMETER, HOLE DEPTH, EDGE DISTANCE(S), ANCHOR SPACING(S), CONCRETE THICKNESS, AND TIGHTENING TORQUE.

11 SCREW ANCHOR IN CONCRETE
3/4" = 1'-0"

ADHESIVE ANCHOR IN 2500 PSI MIN CONCRETE						
ADHESIVE TYPE	ANCHOR: THRD ROD	ANCHOR: REBAR	PILOT HOLE	MIN EMBED UNO H_{ef}	MIN EDGE DISTANCE C_{min}	MIN SPCG S_{min}	MIN CONC DEPTH H_{min}
SIMPSON SET-XP (ICC-ESR 2508)	⅜"ø	#3	½"ø	3"	1¾"	3"	H_{ef} + 2½"
	½"ø	#4	⅝"ø	4"	1¾"	3"	H_{ef} + 3⅛"
	⅝"ø	#5	¾"ø	5"	1¾"	3"	H_{ef} + 3¾"
	¾"ø	#6	⅞"ø	6"	1¾"	3"	H_{ef} + 4⅜"
	⅞"ø	#7	1"ø	7"	1¾"	3"	H_{ef} + 4"
	1"ø	#8	1⅛"ø	8"	1¾"	3"	H_{ef} + 5⅝"
	1¼"ø	#10	1⅜"ø	10"	2¾"	6"	H_{ef} + 6⅞"
HILTI HIT-HY 200R (ICC-ESR 3187)	⅜"ø	N/A	7/16"ø	3"	1¾"	1⅞"	H_{ef} + 1¼"
	N/A	#3	½"ø	3"	1¾"	1⅞"	
	½"ø	N/A	9/16"ø	4"	1¾"	2½"	
	N/A	#4	⅝"ø	4"	1¾"	2½"	
	⅝"ø	#5	¾"ø	5"	1¾"	3⅛"	H_{ef} + 1½"
	¾"ø	#6	⅞"ø	6"	1¾"	3¾"	H_{ef} + 1¾"
	⅞"ø	#7	1"ø	7"	1¾"	4⅜"	H_{ef} + 2"
	1"ø	#8	1⅛"ø	8"	1¾"	5"	H_{ef} + 2¼"
	N/A	#9	1⅜"ø	9"	1¾"	5⅝"	H_{ef} + 2¾"
	1¼"ø	N/A	1⅜"ø	10"	1¾"	6¼"	
	N/A	#10	1½"ø	10"	1¾"	6¼"	H_{ef} + 3"

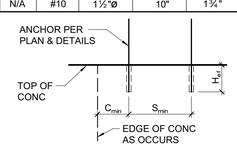

NOTES:

1. INSTALL ADHESIVE ANCHORS PER MANUFACTURER'S INFORMATION AND ICC REPORT.
2. CONTRACTOR TO VERIFY MINIMUM EDGE DISTANCES, SPACING, AND THICKNESS ARE IN ACCORDANCE W/ SCHEDULE PRIOR TO INSTALLING ANCHOR.
3. HOLES TO BE DRILLED W/ ROTARY DRILL ONLY. WHEN DRILLING HOLES IN EXISTING CONCRETE, USE CARE AND CAUTION TO AVOID CUTTING OR DAMAGING THE EXISTING REINFORCING BARS. MAINTAIN A REASONABLE CLEARANCE BETWEEN REINFORCEMENT AND THE DRILLED-IN ANCHOR. FILL ABANDONED HOLES W/ HIGH STRENGTH GROUT.
4. SPECIAL INSPECTION IS REQUIRED PER SECTION 1705 AND THE REQUIREMENTS OF THE ICC REPORTS. THE SPECIAL INSPECTOR SHALL PERFORM PERIODIC/CONTINUOUS INSPECTION IN ACCORDANCE WITH TABLE 1705.3. THE SPECIAL INSPECTOR SHALL INSPECT ANCHOR TYPE, ANCHOR DIMENSIONS, HOLE CLEANLINESS, EMBEDMENT DEPTH, CONCRETE TYPE, CONCRETE COMPRESSIVE STRENGTH, DRILL BIT DIAMETER, HOLE DEPTH, EDGE DISTANCE(S), ANCHOR SPACING(S), CONCRETE THICKNESS, AND ADHESIVE INJECTION.

12 ADHESIVE ANCHOR IN CONCRETE
3/4" = 1'-0"

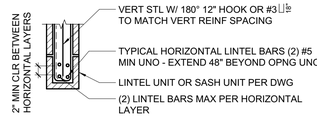

8" CMU LINTEL

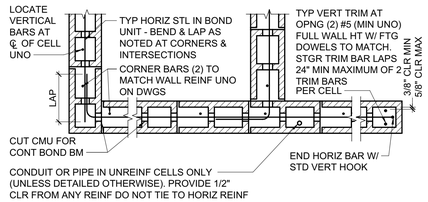

8" CMU (PLAN VIEW) - SINGLE LAYER VERT REINF

7 8" CMU (PLAN VIEW) - SINGLE LAYER VERT REINF
3/4" = 1'-0"

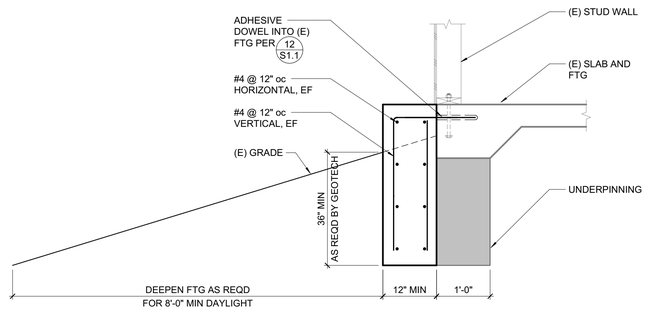

UNDERPINNING NOTES:

1. UNDERPINNING SHALL EXTEND INTO COMPETENT MATERIAL AS DETERMINED BY GEOTECH IN THE FIELD
2. CAST UNDERPINNING BLOCKS USING LEAN CONCRETE PER SPECS, DRY PACK AS REQUIRED FOR FULL BEARING BETWEEN UNDERPINNING AND FOUNDATION. SPACE 2'-0" LONG BLOCKS AT 4'-0" OC, MAX.
3. SEQUENCING NOTES:
   A. EXCAVATE AND PROVIDE UNDERPINNING BLOCKS (WIDTH TO MATCH FOOTING WIDTH ABOVE) STARTING FROM EDGE OF SERVER PIT AND EXTENDING AS FAR AS NECESSARY TO ESNURE FOUNDATIONS MEET THE REQUIREMENTS LAID OUT ABOVE (CONSULT WITH GEOTECHNICAL ENGINEER AS REQUIRED).
   B. CAST UNDERPINNING BLOCKS. ONCE BLOCKS HAVE REACHED FULL DESIGN STRENGTH PER SPECS, REMOVE SOIL BETWEEN UNDERPINNINGS AND CAST UNDERPINNING BLOCKS AT REMAINING VOID SPACES USING LEAN CONCRETE.
   C. AT THE INTERIOR FACE OF (E) FOUNDATION, PROVIDE A VERTICAL SOIL CUT IN ORDER TO ENSURE THE FLOOR SLAB REMAINS SUPPORTED. PROVIDE SHORING AT THE EXCAVATION AS REQUIRED TO MAINTAIN SOIL SUPPORT FOR THE SLAB AND ADJACENT FOOTING. BACKFILL THE EXCAVATION WITH COMPACTED FILL MATERAIL AS APPROVED BY THE GEOTECHNICAL ENGINEER.
   D. SUBMIT RFI IF SLAB ON GRADE IS UNDERMINED DURING UNDERPINNING.

8 UNDERPINNING DETAIL
3/4" = 1'-0"

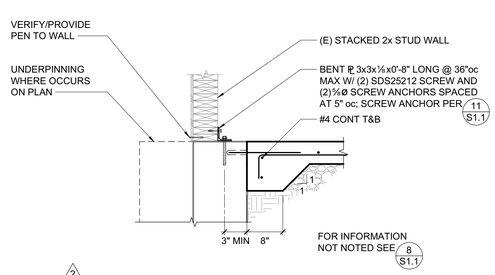

9 FOUNDATION DETAIL AT SOUTH WALL
3/4" = 1'-0"

NOTES:

1. "PIPE" = ANY PENETRATION THROUGH OR EMBEDDED IN FOUNDATION STRUCTURE.
2. "PIPE" EMBEDDED IN CONC TO BE PROVIDED W/ FLEXIBLE COUPLINGS AT ENTRY/EXIT POINTS.
3. SLEEVES SHALL BE PVC, ID TO BE 2" LARGER THAN PIPE OD.
4. NO "PIPE" TO RUN PARALLEL IN FOOTINGS, STEM OR CURB.
5. PVC CONDUIT ("PIPE") EMBEDDED IN CURB/STEM MAY BE WIRE TIED TO HORIZ REINF.
6. WRAPPED PIPES SHALL HAVE 1½" CLEAR FROM WRAPPING TO REINF. SLEEVED PIPES SHALL HAVE 1½" MINIMUM CLEAR TO REINF. WRAP W/ ¼" FOAM SHEET,(8) LAYERS MINIMUM. CONCRETE COVER TO BE 1" MINIMUM.
7. CLEARANCE BETWEEN "PIPES" TO BE 3" MIN TYP.
8. NOTIFY ENGINEER FOR REPAIRS IF (E) REINF STEEL IS DAMAGED IN CONC REMOVAL.
9. ALL PIPES THOUGH FOOTINGS TO BE WRAPPED OR SLEEVED

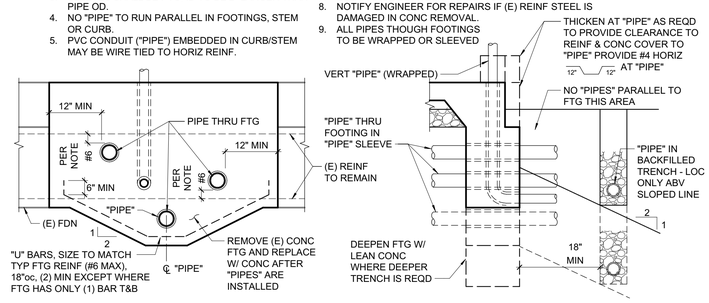

1 TYPICAL PIPE THROUGH FOOTING
3/4" = 1'-0"

MINIMUM BAR LAPS FOR REINFORCING STEEL CONCRETE STRENGTH: 2500 PSI OR GREATER (STAGGER SPLICES)					
SIZE	LAP LENGTH	SIZE	LAP LENGTH	SIZE	LAP LENGTH
#3	19"	#6	38"	#9	94"
#4	25"	#7	61"	#10	115"
#5	37"✳	#8	77"	#11	138"

(CLASS B TOP BAR)
BAR SPCG SHALL NOT BE LESS THAN 4x BAR DIA OR 4".
✳ WHERE COVER NOT LESS THAN 1½", #5 LAP LENGTH = 31"

CONC COVER FOR REINF STL ..... 'CLR'

CAST AGAINST EARTH OR GR ..... 3"

EXPOSED TO EARTH (FORMED) OR WEATHER
- #5 & SMALLER ..... 1½"
- #6 & LARGER ..... 2"

NOT EXPOSED TO EARTH OR WEATHER
- #5 & SMALLER ..... 1"
- #6 & LARGER, & ALL BM STIRRUPS, COL TIES & SPIRALS ..... 1½"

ALL REINF SHALL EXTEND AS FAR AS POSSIBLE. WHERE BAR SPLICES ARE REQUIRED, BARS SHALL BE LAPPED PER SCHEDULE ABOVE UNLESS DETAILED OTHERWISE. WHERE REINF TERMINATES AT END OF MEMBER, REINF SHALL END IN A STD 90° OR 180° HK UNLESS DETAILED OTHERWISE.

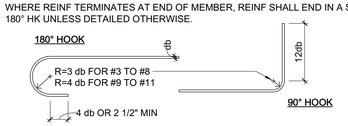

STANDARD HOOKS & BENDS

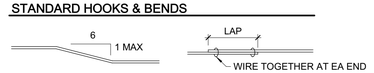

COL BAR & STRUCT OFFSET **SPLICE**

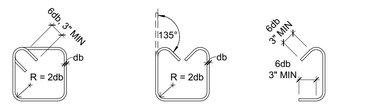

135° STIRRUP TIES #3, #4, #5 | STIRRUP #3, #4, #5 | CROSSTIE #3, #4, #5

5 TYPICAL REINFORCING DETAILS (f'c = 2500psi MIN)
3/4" = 1'-0"

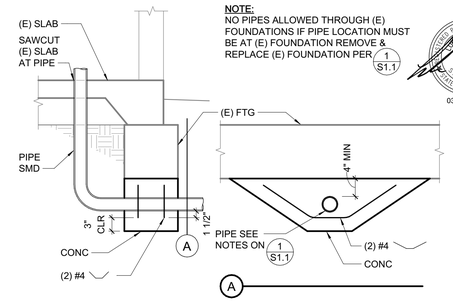

NOTE:
NO PIPES ALLOWED THROUGH (E) FOUNDATIONS IF PIPE LOCATION MUST BE AT (E) FOUNDATION REMOVE & REPLACE (E) FOUNDATION PER 1 S1.1

2 NEW PIPE AT EXISTING FOUNDATION
3/4" = 1'-0"

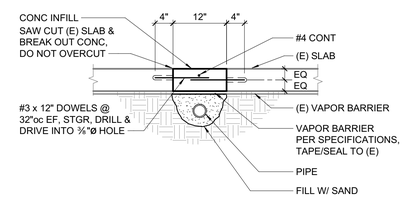

3 NEW PIPE AT EXISTING SLAB
3/4" = 1'-0"

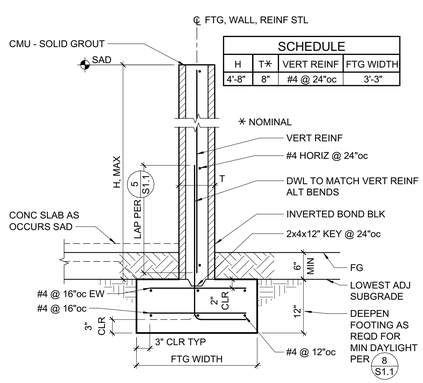

SCHEDULE			
H	T✳	VERT REINF	FTG WIDTH
4'-8"	8"	#4 @ 24"oc	3'-3"

6 CMU SITE WALL
3/4" = 1'-0"

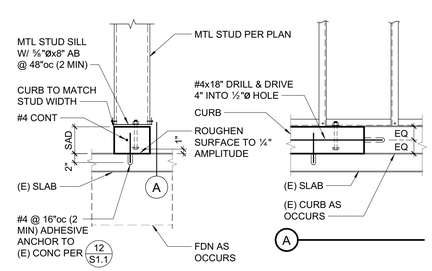

4 NEW CURB AT EXISTING SLAB
3/4" = 1'-0"

AXIA ARCHITECTS
540 MENDOCINO AVE, SANTA ROSA, CA 95401
707 542 4652 AXIAARCHITECTS.COM

ARCHITECT

CONSULTANT:
ZFA STRUCTURAL ENGINEERS
1212 fourth street | suite z
santa rosa ca 95404
zfa job no. 2528
zfa.com
707 526.0992

copyright © 2022
THIS DOCUMENT AND THE IDEAS INCORPORATED HEREIN, AS AN INSTRUMENT OF PROFESSIONAL SERVICE, IS THE PROPERTY OF THE ENGINEER AND IS NOT TO BE USED, IN WHOLE OR IN PART FOR ANY OTHER PROJECT WITHOUT WRITTEN AUTHORIZATION OF THE ENGINEER.

03/24/2025

Sonoma County Facilities Development & Management

PINE MOUNTAIN ANTENNA COMMUNICATIONS VAULT RECONSTRUCTION

PINE MOUNTAIN RD., CLOVERDALE, CA 95425

SEAL:

Date Stamped: 4/7/2025 Permit #: BP-2025-42-R01 Plans Examiner: Ronald Morris
REVIEWED FOR CODE COMPLIANCE - PERMIT SONOMA

SHEET LOG

REV #	DATE:	ISSUED FOR:
1	09/19/24	ADDENDUM 01
2	3/21/25	PERMIT RESUBMITTAL

JOB NUMBER: 22028

SHEET:
S1.1
TYPICAL CONCRETE AND CMU DETAILS

ORIGINAL DATE: FEBRUARY 28, 2022

PERMIT SET - NOT FOR CONSTRUCTION

3/24/2025 2:01:12 PM W:\2022\22028 Pine Mountain Antenna Site\Drawings\22028 Pine Mtn TI_R23.rvt

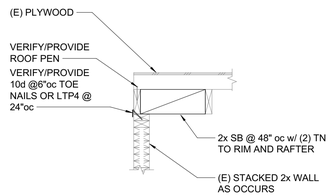

16 (E) RAFTER PARR TO (E) WALL
3/4" = 1'-0"

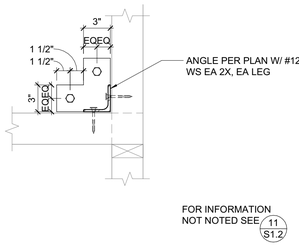

12 PLAN VIEW AT ANGLE
1 1/2" = 1'-0"

RIM JOIST/BLKG TO TOP ℞, TOE NAIL	10d @ 6"oc
TRUSSES, JOISTS OR RAFTERS AT ALL BEARING POINTS TOE NAILS EACH SIDE	(2) 10d
TRUSSES, JOISTS OR RAFTERS TO SIDE OF STUDS EIGHT (8) INCH JOISTS OR LESS	(3) 16d
FOR EACH ADDITIONAL 4 INCHES OF DEPTH OF JOIST	(1) 16d
BLOCKING BETWEEN JOISTS OR RAFTERS: TO JOIST OR RAFTERS - TOE NAILS EA SIDE, EA END	(2) 10d
TO JOIST OR RAFTER BEARINGS - TOE NAILS EA SIDE	(2) 10d
BLOCKING BETWEEN STUDS, EACH END TOE NAILS	(2) 10d OR (2) 16d
BRIDGING TO JOIST, TOE NAIL EACH END	(2) 8d
2" SUBFLOOR TO JOIST OR GIRDER, BLIND & FACE NAIL	(2) 16d
SOLE PLATE TO JOIST OR BLOCKING, FACE NAIL	16d @ 16"oc
SOLE PLATE TO JOIST OR BLOCKING AT BRACED WALL PANELS	(3) 16d @ 16"oc
TOP PLATE TO STUD, END NAIL	(2) 16d
STUD TO SOLE PLATE, TOE NAIL	(4) 8d
DOUBLE STUDS AT EXTERIOR WALLS, FACE NAIL	16d @ 12"oc
DOUBLE STUDS, FACE NAIL	16d @ 24"oc
DOUBLE TOP PLATES, FACE NAIL	16d @ 12"oc
TOP PLATES, LAPS & INTERSECTIONS, FACE NAIL	(3) 16d
CONTINUOUS HEADER, TWO PIECES	16d @ 16"oc ALONG EACH EDGE
DOUBLE TOP PLATE LAP AT CORNER	(3) 16d
CONTINUOUS HEADER TO STUD, TOE NAIL	(4) 8d
CEILING JOISTS, LAPS OVER PARTITIONS, FACE NAIL	(3) 16d
CEILING JOISTS TO PARALLEL RAFTERS, FACE NAIL	(3) 16d
BUILT-UP CORNER STUDS	16d @ 12"oc
POST TO SILL/SOLE/TOP PLATE, EACH SIDE TOE NAIL	(4) 10d

8 NAILING SCHEDULE
3/4" = 1'-0"

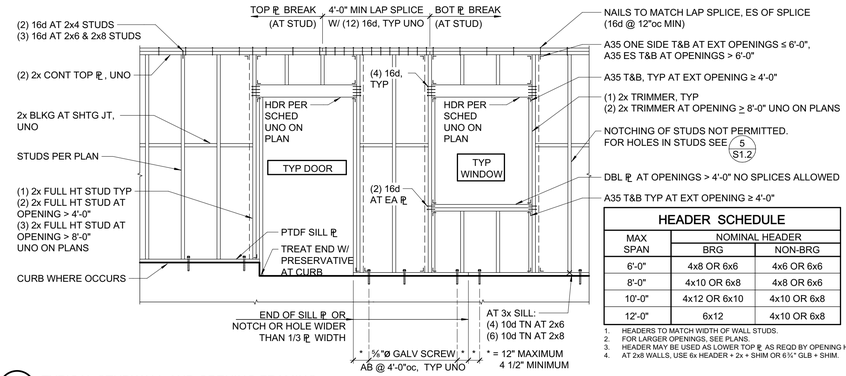

HEADER SCHEDULE

MAX SPAN	NOMINAL HEADER BRG	NOMINAL HEADER NON-BRG
6'-0"	4x8 OR 6x6	4x6 OR 6x6
8'-0"	4x10 OR 6x8	4x8 OR 6x6
10'-0"	4x12 OR 6x10	4x10 OR 6x8
12'-0"	6x12	4x10 OR 6x8

1. HEADERS TO MATCH WIDTH OF WALL STUDS.
2. FOR LARGER OPENINGS, SEE PLANS.
3. HEADER MAY BE USED AS LOWER TOP ℞ AS REQD BY OPENING HEIGHT.
4. AT 2x8 WALLS, USE 6x HEADER + 2x + SHIM OR 6⅝" GLB + SHIM.

1 TYPICAL STUDWALL AND OPENING FRAMING
3/8" = 1'-0"

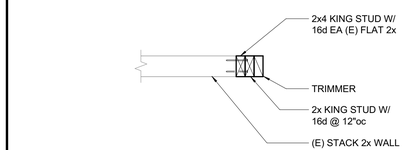

17 PLAN VIEW AT NEW OPENING
1" = 1'-0"

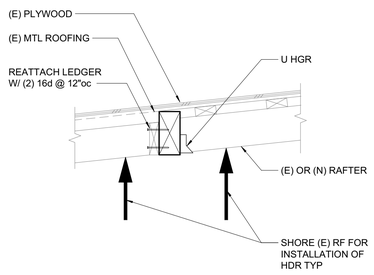

13 (E) RAFTER AT NEW HEADER
1" = 1'-0"

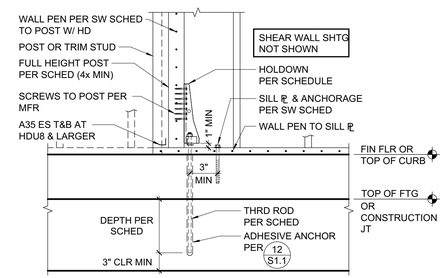

HOLDOWN	THRD ROD	DEPTH	MIN FTG WIDTH	MIN POST SIZE UNO ON PLANS	TENSION TEST LOAD (LBS)
HDU2	⅝"ø	12"	12"	4x	6200

9 TYPICAL HOLDOWN
3/4" = 1'-0"

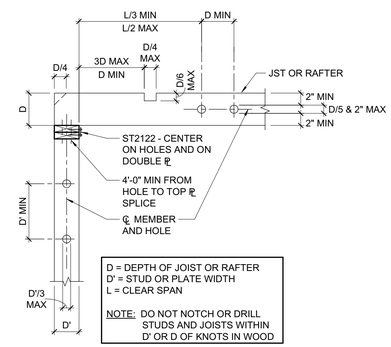

5 HOLES AND NOTCHES IN WOOD STUDS, JOISTS, AND PLATES
3/4" = 1'-0"

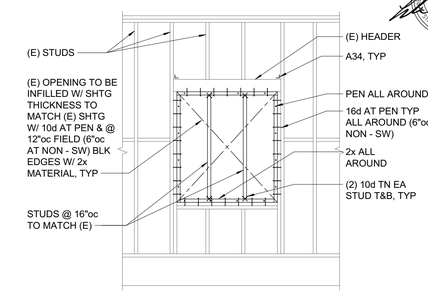

2 WINDOW INFILL AT EXISTING WALL
3/8" = 1'-0"

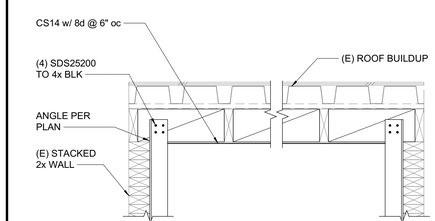

18 ROOF BLOCKING
1" = 1'-0"

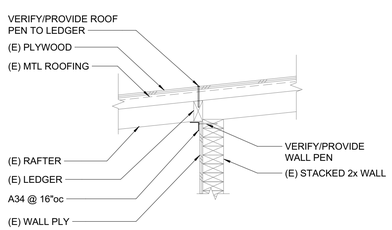

14 (E) RAFTER OVER INT STACKED WALL
1" = 1'-0"

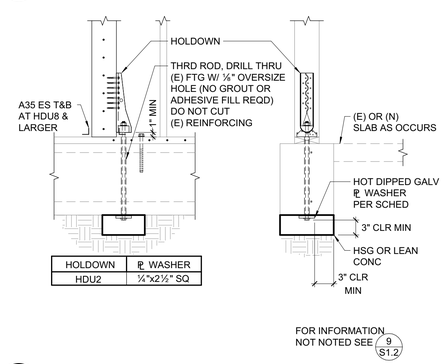

HOLDOWN	℞ WASHER
HDU2	⅛"x2½" SQ

10 HDU THROUGH BOLT DETAIL
3/4" = 1'-0"

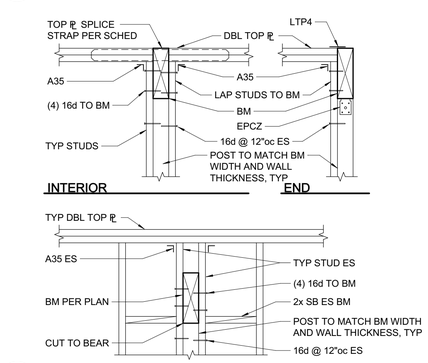

6 TYPICAL BEAM IN AND THRU STUD WALL
3/4" = 1'-0"

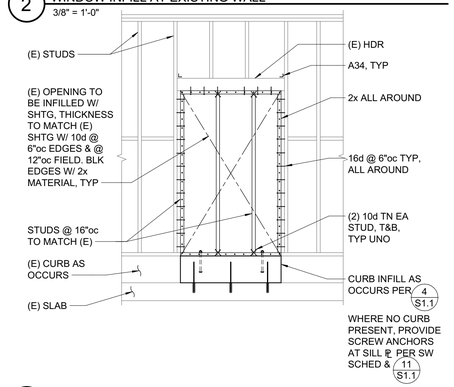

3 DOOR INFILL AT EXISTING WALL
3/8" = 1'-0"

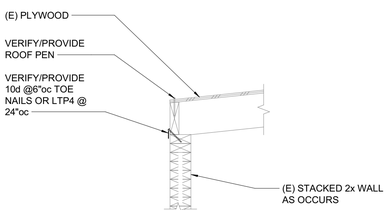

15 (E) RAFTER OVER EXT STACKED WALL
1" = 1'-0"

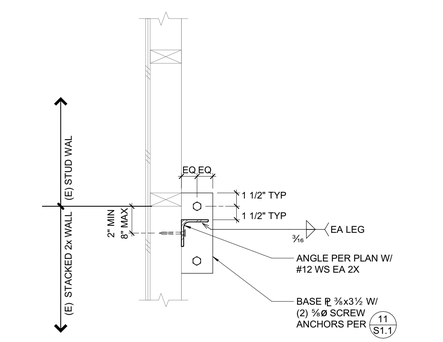

11 ANCHORAGE AT ANGLE COLUMN
1 1/2" = 1'-0"

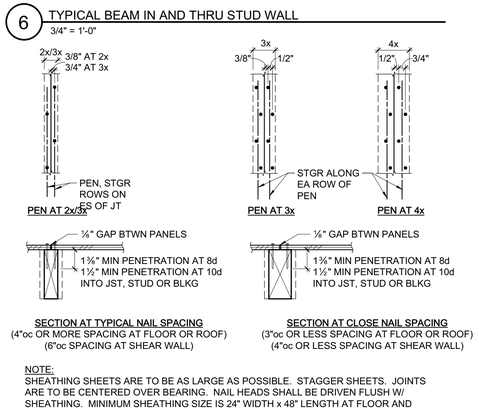

NOTE:
SHEATHING SHEETS ARE TO BE AS LARGE AS POSSIBLE. STAGGER SHEETS. JOINTS ARE TO BE CENTERED OVER BEARING. NAIL HEADS SHALL BE DRIVEN FLUSH W/ SHEATHING. MINIMUM SHEATHING SIZE IS 24" WIDTH x 48" LENGTH AT FLOOR AND ROOF, AND 12"x48" AT WALLS.

7 SHEATHING NAILING
1 1/2" = 1'-0"

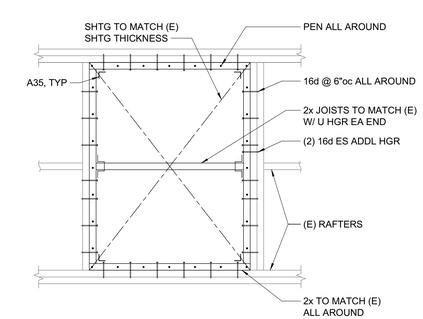

4 NEW INFILL AT EXISTING ROOF
3/4" = 1'-0"

PERMIT SET - NOT FOR CONSTRUCTION

AXIA ARCHITECTS
540 MENDOCINO AVE, SANTA ROSA, CA 95401
707 542 4652 AXIAARCHITECTS.COM
ARCHITECT
ZFA STRUCTURAL ENGINEERS
1212 fourth street | suite z
santa rosa ca 95404
zfa job no. 2328
zfa.com
707 526.0992

copyright © 2022
THIS DOCUMENT AND THE IDEAS INCORPORATED HEREIN, AS AN INSTRUMENT OF PROFESSIONAL SERVICE, IS THE PROPERTY OF THE ENGINEER AND IS NOT TO BE USED, IN WHOLE OR IN PART FOR ANY OTHER PROJECT WITHOUT WRITTEN AUTHORIZATION OF THE ENGINEER.

CONSULTANT

Sonoma County Facilities Development & Management

PINE MOUNTAIN ANTENNA COMMUNICATIONS VAULT RECONSTRUCTION

PINE MOUNTAIN RD., CLOVERDALE, CA 95425

SEAL:

Date Stamped: 4/7/2025 Permit #: BLD24-4348-R01 Plans Examiner: Ronald Morris
REVIEWED FOR CODE COMPLIANCE - PERMIT SONOMA

SHEET LOG

REV #	DATE:	ISSUED FOR:
1	09/19/24	ADDENDUM 01
2	3/21/25	PERMIT RESUBMITTAL

JOB NUMBER: 22028

SHEET: S1.2

MODERNIZATION WOOD

ORIGINAL DATE: FEBRUARY 28, 2022

3/24/2025 2:01:17 PM W:\2022\22028 Pine Mountain Antenna Site\Drawings\22028 Pine Mtn TI_R23.rvt

SHEAR WALL SCHEDULE

SW	APA RATED SHEATHING	NAILING (PEN)	ANCHORAGE					REMARKS
			⅝"Ø BOLT FDN		AT FRAMING			
			2x SILL	3x SILL	16d	A35	SDS *	
A	15/32 " (32/16) EXP 1	10d @ 6"oc	48"oc	48"oc	8"oc	24"oc	18"oc	
B	15/32 " (32/16) EXP 1	10d @ 4"oc	32"oc	32"oc	6"oc	16"oc	12"oc	

SHEAR WALL SCHEDULE NOTES:

1. AT EXISTING SHEAR WALLS, CONTRACTOR TO VERIFY EXISTING SHEATHING FOR DEFINED LENGTH. VERIFY EXISTING SHEAR WALL NAILING FOR SHEAR WALL TYPES B THRU C UNO. VERIFY EXISTING SHEAR WALL ANCHORAGE AT ALL EXPOSED CONDITIONS ONE LOCATION MINIMUM PER SHEAR WALL LINE, SEE PLANS FOR ADDITIONAL VERIFICATION REQUIREMENTS.
2. AT EXISTING SHEAR WALL DESIGNATING ADDITIONAL NAILING/ANCHORAGE. ADD ADDITIONAL PEN AT EXISTING SHEATHING PANEL EDGES TO MEET NAILING PER SCHEDULE. AT EXISTING PLATE ANCHORAGE, PROVIDE ADDITIONAL FASTENERS TO MEET ANCHORAGE PER SCHEDULE AT EXISTING FOUNDATION SILL PLATES, PROVIDE ⅝Ø SCREW ANCHORS PER 11/S1.1 TO MEET MINIMUM SPACING PER SCHEDULE.

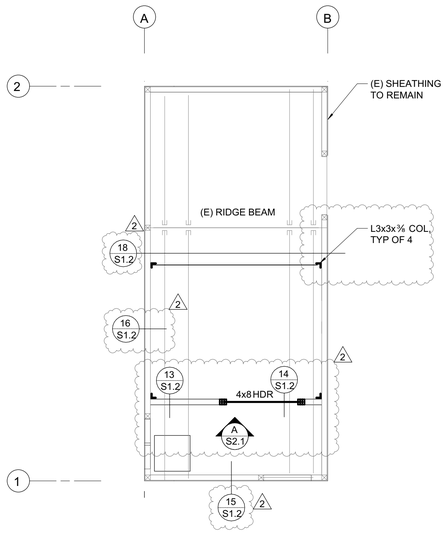

ROOF FRAMING PLAN

1/4" = 1'-0"

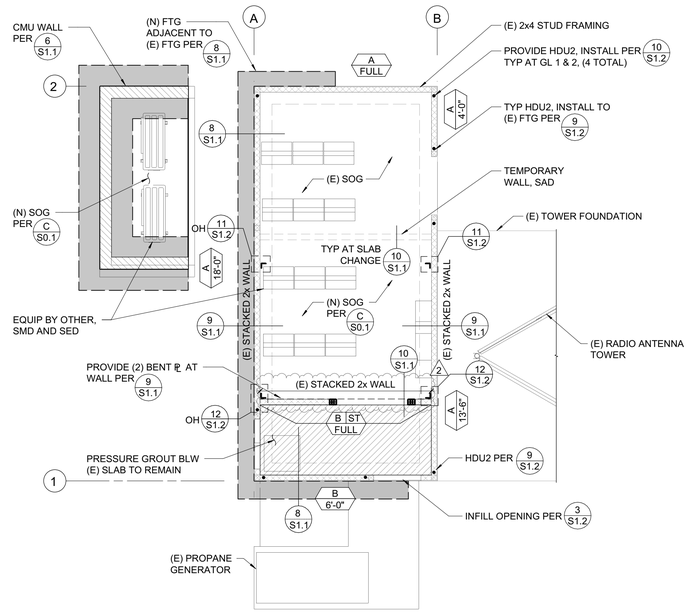

FOUNDATION PLAN

1/4" = 1'-0"

FOUNDATION PLAN NOTES:

1. REFER TO SHEETS S0.1, S1.1, AND S1.2 FOR GENERAL NOTES AND TYPICAL DETAILS. THE FOLLOWING DETAIL REFERENCES ARE PROVIDED FOR THE CONTRACTOR'S CONVENIENCE ONLY. ALL GENERAL NOTES AND TYPICAL DETAILS NOTED ABOVE ARE APPLICABLE AND SHALL BE FOLLOWED.
2. COORDINATE ALL DIMENSIONS WITH ARCHITECTURAL DRAWINGS PRIOR TO CONSTRUCTION. NOTIFY ARCHITECT/ENGINEER OF ANY DISCREPANCIES.
3. COORDINATE WITH ARCHITECTURAL DRAWINGS PRIOR TO CONSTRUCTION. NOTIFY ARCHITECT/ENGINEER OF ANY DISCREPANCIES.
4. PLUMBING AND ELECTRICAL CONDUIT AND GROUND STRAP SHALL NOT BE LAID WITHIN FOUNDATIONS. NO UTILITY PIPES OR CONDUITS SHALL BE LOCATED THRU COLUMN FOOTINGS OR FRAME FOOTINGS. NO VERTICAL OR HORIZONTAL PIPES OR CONDUITS SHALL BE LOCATED THROUGH STEEL FRAMES, STEEL COLUMNS, OR STEEL BASE PLATES. PROVIDE FURRING AND/OR THICKENED CONCRETE WHERE REQUIRED TO CLEAR UTILITY SYSTEMS. NOTIFY STRUCTURAL ENGINEER/ARCHITECT PRIOR TO ANY INSTALLATION NOT CONFORMING TO THESE DETAILS.

   PIPES THROUGH FOOTINGS SHALL BE PER 1/S1.1 AND 2/S1.1.

   PIPES AT SLAB ON GRADE SHALL BE PER 3/S1.1.
5. CONDUIT OR PLUMBING NOT ALLOWED WITHIN CONC FILL ON HOLLOW CORE PANEL DECK.
6. FLOOR PRESSURE GROUT ALTERNATE NOTE: FLOOR FINISH TO BE APPLIED OVER REMEDIATED SLAB TO BE PER ARCHITECTURAL DRAWINGS. SLAB REPAIR SHALL RESTORE SLAB TO LEVEL CONDITION WITH ±⅛" MAX VARIANCE.

PLAN LEGEND

SYMBOL	REFERENCE DETAIL	DESCRIPTION
		INDICATES FOUNDATION.
88		INDICATES GRIDLINE AT FACE OF WALL.
MU 1,000#		INDICATES APPROXIMATE LOCATION, SIZE AND MAXIMUM WEIGHT OF MECHANICAL UNIT. SEE MECHANICAL DRAWINGS FOR ANCHORAGE AND ADDITIONAL INFORMATION.
		INDICATES EXISTING FOUNDATION.
		INDICATES EXISTING FRAMING.
		INDICATES CMU WALL
A 10'-0"	1/S1.2 G/S0.1	INDICATES (E) SHEAR WALL, REMOVE (E) T-11 AND PROVIDE NEW PLYWOOD WITH NAILING/ANCHORAGE PER SW SCHED WITH MINIMUM LENGTH DEFINED.

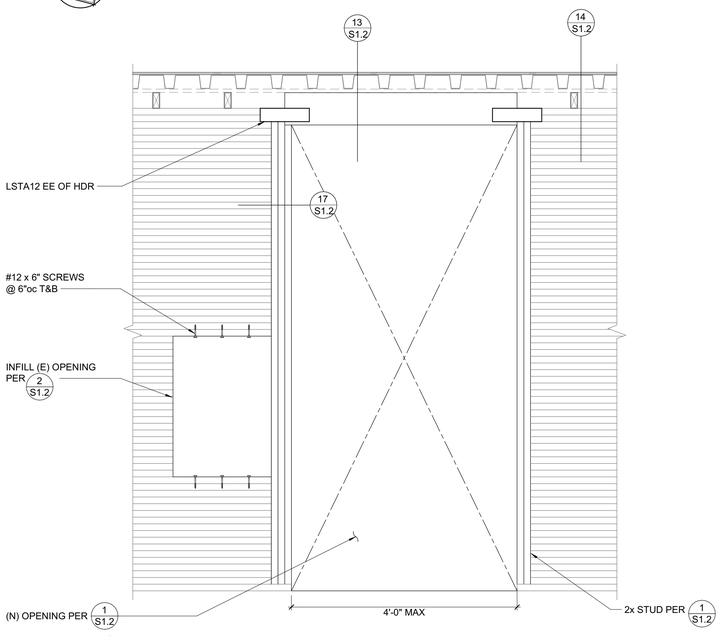

A DOOR INFILL AT EXISTING WALL

3/4" = 1'-0"

ARCHITECT:
AXIA ARCHITECTS
540 MENDOCINO AVE, SANTA ROSA, CA 95401
707 542 4652 AXIAARCHITECTS.COM

CONSULTANT:
ZFA STRUCTURAL ENGINEERS
1212 fourth street | suite z
santa rosa ca 95404
zfa job no. 2328
zfa.com
707 526.0992

copyright © 2022
THIS DOCUMENT AND THE IDEAS INCORPORATED HEREIN, AS AN INSTRUMENT OF PROFESSIONAL SERVICE, IS THE PROPERTY OF THE ENGINEER AND IS NOT TO BE USED, IN WHOLE OR IN PART FOR ANY OTHER PROJECT WITHOUT WRITTEN AUTHORIZATION OF THE ENGINEER.

03/24/2025

Sonoma County Facilities Development & Management

PINE MOUNTAIN ANTENNA COMMUNICATIONS VAULT RECONSTRUCTION

PINE MOUNTAIN RD., CLOVERDALE, CA 95425

SEAL:

Date Stamped: 4/7/2025 Permit #: BLD24-0245 R01 Plans Examiner: Ronald Morris
REVIEWED FOR CODE COMPLIANCE - PERMIT SONOMA

SHEET LOG

REV #	DATE:	ISSUED FOR:
1	09/19/24	ADDENDUM 01
2	3/21/25	PERMIT RESUBMITTAL

JOB NUMBER: 22028

SHEET:

S2.1

FOUNDATION AND ROOF FRAMING PLAN

ORIGINAL DATE: FEBRUARY 28, 2022

PERMIT SET - NOT FOR CONSTRUCTION

3/24/2025 2:01:23 PM W:\2022\22028 Pine Mountain Antenna Site\Drawings\22028 Pine Mtn TI_R23.rvt

Split Heat Pump Unit Schedule

UNIT NO.	MFGR.	SECTION	MODEL NO.	AIR FLOW CFM	COOLING CAPACITY * TOTAL BTUH	COOLING CAPACITY * SENSIBLE BTUH	COOLING CAPACITY * TTL KW.	HEATING CAPACITY ** HEAT PUMP (BTU/HR.)	HEATING CAPACITY ** STRIP HEAT (KW)	ELECTRICAL VOLTAGE	ELECTRICAL PHASE	ELECTRICAL MIN. AMP	ELECTRICAL MAX FUSE SIZE	WEIGHT LBS	REMARKS
FC-1	MITSUBISHI	INDOOR	PKA-A36KA7	705	30,044	29,056	–	25,699	–	240	1	1.0	15	60	WITH SEA COAST COATING
HP-1		OUTDOOR	PUZ-A36NKA7-BS	–						240	1	25	30	230	
FC-2	MITSUBISHI	INDOOR	PKA-A36KA7	705	30,044	29,056	–	25,699	–	240	1	1.0	15	60	WITH SEA COAST COATING
HP-2		OUTDOOR	PUZ-A36NKA7-BS	–						240	1	25	30	230	

* COOLING CAPACITY AT 105°F AMB., 80°F EDB, 62°F EWB
** HEATING CAPACITY AT 30°F AMBIENT, 70°F EDB

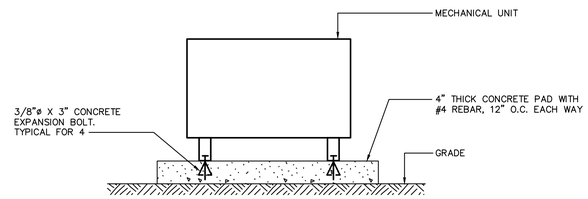

1 Detail – Mechanical Unit Support NOT TO SCALE

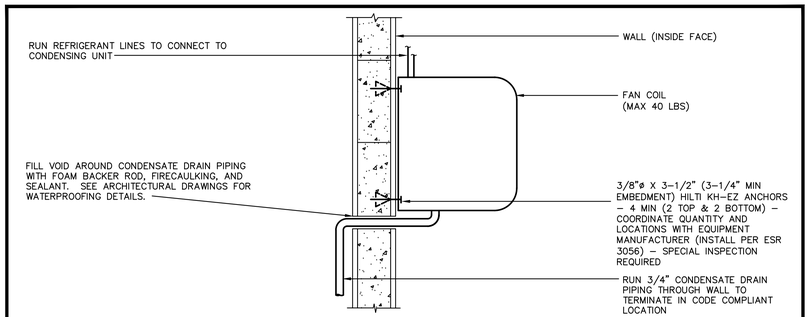

2 Detail – Wall Mounted Fan Coil NOT TO SCALE

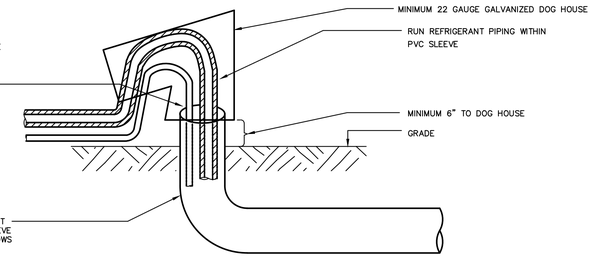

INSULATION PROTECTION. PIPE INSULATION SHALL BE PROTECTED FROM DAMAGE DUE TO SUNLIGHT, MOISTURE, EQUIPMENT MAINTENANCE AND WIND. PROTECTION SHALL, AT MINIMUM, INCLUDE THE FOLLOWING:

1. PIPE INSULATION EXPOSED TO WEATHER SHALL BE PROTECTED BY A COVER SUITABLE FOR OUTDOOR SERVICE. THE COVER SHALL BE WATER RETARDANT AND PROVIDES SHIELDING FROM SOLAR RADIATION THAT CAN CAUSE DEGRADATION OF THE MATERIAL. ADHESIVE TAPE SHALL NOT BE USED TO PROVIDE THIS PROTECTION.
2. PIPE INSULATION COVERING REFRIGERANT SUCTION PIPING LOCATED OUTSIDE THE CONDITIONED SPACE SHALL INCLUDE, OR BE PROTECTED BY, A CLASS I OR CLASS II VAPOR RETARDER. ALL PENETRATIONS AND JOINTS SHALL BE SEALED.
3. PIPE INSULATION BURIED BELOW GRADE MUST BE INSTALLED IN A WATER PROOF AND NONCRUSHABLE CASING OR SLEEVE.

3 Detail – Refrigerant Piping Below Grade NOT TO SCALE

12"ø	ROUND DUCT, INSIDE DIAMETER INDICATED
18x12	RECTANGULAR DUCT, INSIDE WIDTH AND INSIDE DEPTH
	SUPPLY DUCT, SECTION
	RETURN DUCT, SECTION
	EXHAUST DUCT, SECTION
FD	FIRE DAMPER IN DUCT
FD D	SINGLE BLADE VOLUME DAMPER
D	TURNING VANE
	TAKE-OFF WITH ADJUSTABLE TURNING VANE
	ROUND CONICAL TEE WITH TAKE-OFF AT 45° TO DIRECTION OF MAIN DUCT
	ACCESS PANEL IN DUCT
	INTERNAL ACOUSTIC INSULATION INSIDE DUCT, SIZES SHOWN ARE NET INSIDE
500 / 18x18x1	CEILING DIFFUSER, CFM ON TOP, NECK SIZE AND NUMBER OF DIRECTIONS OF BLOW ON BOTTOM
200 / 12x12	CEILING RETURN REGISTER, CFM ON TOP, NECK SIZE ON BOTTOM
200 / 12x12	CEILING EXHAUST REGISTER, CFM ON TOP, NECK SIZE ON BOTTOM
200 / 12x12	SIDEWALL EXHAUST, RETURN, OR RELIEF REGISTER, CFM ON TOP, NECK SIZE ON BOTTOM
500 / 18x12x1	SIDEWALL DIFFUSER, CFM ON TOP, NECK SIZE AND NUMBER OF DIRECTIONS OF BLOW ON BOTTOM
T	THERMOSTAT MOUNT ON WALL
TYP.	TYPICAL
(E)	EXISTING
(N)	NEW
NTS	NOT TO SCALE
DN	DOWN
AFF	ABOVE THE FINISHED FLOOR
1	DESIGNATION OF SHEET NOTE #1

Mechanical Legend

ARCHITECT:
AXIA ARCHITECTS
540 Mendocino Ave, Santa Rosa, CA 95401
707 542 4652
axiaarchitects.com

CONSULTANT:
LEFLER ENGINEERING, INC.
1651 Second Street
San Rafael, CA 94901
(415) 456-4220
(415) 456-1249 fax

Sonoma County Facilities Development & Management

PINE MOUNTAIN ANTENNA COMMUNICATIONS BUILDING RECONSTRUCTION

33550 PINE MOUNTAIN RD., CLOVERDALE, CA 95425 APN: 117-240-051

SEAL:
REGISTERED PROFESSIONAL ENGINEER TREVOR M. LEFLER Exp. 3-31-26 M 37725 MECHANICAL STATE OF CALIFORNIA

Date Stamped: 4/7/2025 Permit: D24-0459 Reviewer: Ronald Morris
REVIEWED FOR CODE COMPLIANCE - PERMIT SONOMA

SHEET LOG

REV #	DATE:	ISSUED FOR:
	3/27/2024	50% CD Drawings
	4/30/2024	100% CD Drawings
	3/21/2025	Structural Wall Revision

JOB NUMBER: 1191

SHEET: **M1.1**

MECHANICAL SCHEDULES AND LEGEND

ORIGINAL DATE: APRIL 30, 2024

© AXIA ARCHITECTS

3/21/2024 11:10:29 AM C:\Users\Sratley\Documents\REVIT\1191 Pine Mtn Rd Comm Vault_C_sratleyS9ADW.rvt

Sheet Notes

1. INSTALL CONDENSING UNIT AT GRADE, SEE DETAIL 1/M1.1.
2. INSTALL FAN COIL UNIT ON WALL, SEE DETAIL 2/M1.1.
3. RUN REFRIGERANT PIPING SURFACE MOUNTED ON WALL AND CEILING TO CONNECT BETWEEN CONDENSING UNIT AND FAN COIL UNIT. PROVIDE ALUMINUM JACKETING FOR ALL REFRIGERANT PIPING OUTSIDE. TYPICAL.
4. RUN REFRIGERANT PIPING BELOW GRADE BETWEEN COMMUNICATIONS BUILDING AND CONDENSING UNITS. SEE DETAIL 3/M1.1.
5. INSTALL TEMPERATURE SENSOR ON WALL WIRED TO DDC CONTROLLER.
6. INSTALL DDC CONTROLLER ON WALL. SEE SPECIFICATIONS FOR DDC SEQUENCE OF OPERATIONS.

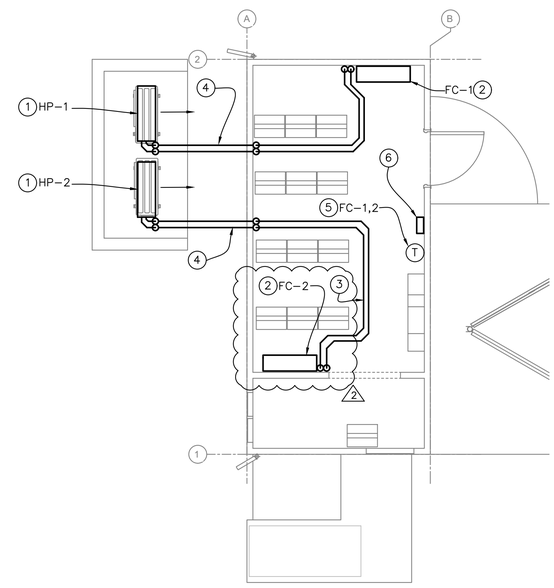

1 MECHANICAL FLOOR PLAN
1/4" = 1'-0"

NORTH

ARCHITECT:

AXIA ARCHITECTS
540 Mendocino Ave, Santa Rosa, CA 95401
707 542 4652
axiaarchitects.com

CONSULTANT:

LEFLER ENGINEERING, INC.
1651 Second Street
San Rafael, CA 94901
(415) 456-4220
(415) 456-1249 fax
MECHANICAL PLUMBING FIRE PROTECTION

Sonoma County Facilities Development & Management

PINE MOUNTAIN ANTENNA COMMUNICATIONS BUILDING RECONSTRUCTION

33550 PINE MOUNTAIN RD., CLOVERDALE, CA 95425 APN: 117-240-051

SEAL:

REGISTERED PROFESSIONAL ENGINEER
TREVOR M. LEFLER
Exp. 3-31-26
M 37725
MECHANICAL
STATE OF CALIFORNIA

Date Stamped 4/7/2025 Permit # 0-24-RS-R Ronald Morris
REVIEWED FOR CODE COMPLIANCE - PERMIT SONOMA

SHEET LOG

REV #	DATE:	ISSUED FOR:
	3/27/2024	50% CD Drawings
	4/30/2024	100% CD Drawings
	3/21/2025	Structural Wall Revision

JOB NUMBER: 1191

SHEET:

M2.1

MECHANICAL FLOOR PLAN

ORIGINAL DATE: APRIL 30, 2024

© AXIA ARCHITECTS

3/21/2024 11:10:29 AM C:\Users\Sratley\Documents\REVIT\1191 Pine Mtn Rd Comm Vault_C_sratleyS9ADW.rvt

STATE OF CALIFORNIA
Mechanical Systems
NRCC-MCH-E — CALIFORNIA ENERGY COMMISSION

CERTIFICATE OF COMPLIANCE			**NRCC-MCH-E**
This document is used to demonstrate compliance for mechanical systems that are within the scope of the permit application and are demonstrating compliance using the prescriptive path outlined in §140.4, or §141.0(b)2 for alterations.			
Project Name:	County of Sonoma Pine Mountain Antenna Communications Vault	**Report Page:**	**(Page 1 of 6)**
Project Address:	Pine Mountain Road, Cloverdale, CA	**Date Prepared:**	2022-10-27T17:00:45-04:00

A. GENERAL INFORMATION

01	Project Location (city)	Cloverdale	04 Total Conditioned Floor Area	133
02	Climate Zone	2	05 Total Unconditioned Floor Area	0
03	Occupancy Types Within Project:		06 # of Stories (Habitable Above Grade)	1
☐ Office (B)	☐ Retail (M)	☐ Non-refrigerated Warehouse (S)		
☐ Hotel/ Motel Guest Rooms (R-1)	☐ School (E)	☐ Healthcare Facility (I)		
☐ High-Rise Residential (R-2/R-3)	☐ Relocatable Class Bldg (E)	☒ Other (Write In)	Data Center Building;	

B. PROJECT SCOPE

This table Includes mechanical systems or components that are within the scope of the permit application and are demonstrating compliance using the prescriptive path outlined in §140.4, or §141.0(b)2 for alterations.

01	02	03
Air System(s)	Wet System Components	Dry System Components
☒ Heating Air System	☐ Water Economizer	☐ Air Economizer
☒ Cooling Air System	☐ Pumps	☐ Electric Resistance Heat
Mechanical Controls	☐ System Piping	☐ Fan Systems
☐ Mechanical Controls (existing to remain, altered or new)	☐ Cooling Towers	☐ Ductwork (existing to remain, altered or new)
	☐ Chillers	☐ Ventilation
	☐ Boilers	☐ Zonal Systems/ Terminal Boxes

STATE OF CALIFORNIA
Mechanical Systems
NRCC-MCH-E — CALIFORNIA ENERGY COMMISSION

CERTIFICATE OF COMPLIANCE			**NRCC-MCH-E**
Project Name:	County of Sonoma Pine Mountain Antenna Communications Vault	**Report Page:**	**(Page 2 of 6)**
Project Address:	Pine Mountain Road, Cloverdale, CA	**Date Prepared:**	2022-10-27T17:00:45-04:00

C. COMPLIANCE RESULTS

Table C will indicate if the project data input into the compliance document is compliant with mechanical requirements. This table is not editable by the user. If this table says "DOES NOT COMPLY" or "COMPLIES with Exceptional Conditions" refer to Table D., or the table indicated as not compliant for guidance.

01		02		03		04		05		06		07		08	09
System Summary §110.1, §110.2, §140.4	AND	Pumps §140.4(k)	AND	Fans/ Economizers §140.4(c), §140.4(e)	AND	System Controls §110.2, §120.2, §140.4(f)	AND	Ventilation §120.1	AND	Terminal Box Controls §140.4(d)	AND	Distribution §120.3, §140.4(l)	AND	Cooling Towers §110.2(e)2	Compliance Results
(See Table F)		(See Table G)		(See Table H)		(See Table I)		(See Table J)		(See Table K)		(See Table L)		(See Table M)	
Yes	AND		AND		AND	Yes	AND		AND		AND		AND		COMPLIES
Mandatory Measures Compliance (See Table Q for Details)														COMPLIES	

D. EXCEPTIONAL CONDITIONS
This table is auto-filled with uneditable comments because of selections made or data entered in tables throughout the form.

E. ADDITIONAL REMARKS
This table includes remarks made by the permit applicant to the Authority Having Jurisdiction.

STATE OF CALIFORNIA
Mechanical Systems
NRCC-MCH-E — CALIFORNIA ENERGY COMMISSION

CERTIFICATE OF COMPLIANCE			**NRCC-MCH-E**
Project Name:	County of Sonoma Pine Mountain Antenna Communications Vault	**Report Page:**	**(Page 3 of 6)**
Project Address:	Pine Mountain Road, Cloverdale, CA	**Date Prepared:**	2022-10-27T17:00:45-04:00

F. HVAC SYSTEM SUMMARY (DRY & WET SYSTEMS)

This table is used to demonstrate compliance for mechanical equipment with mandatory requirements found in §110.1 and §110.2(a) and prescriptive requirements found in §140.4(a), §140.4(b) and §140.4(k) or §141.0(b)2 for alterations.

Dry System Equipment Sizing (includes air conditioners, condensers, heat pumps, VRF, furnaces and unit heaters)

01	02	03	04	05	06	07	08	09	10	11
Name or Item Tag	Equipment Category per Tables 110.2	Equipment Type per Tables 110.2 / Title 20	Smallest Size Available[1] §140.4(a)	Equipment Sizing per Mechanical Schedule (kBtu/h) §140.4 (a&b)						
				Heating Output[2,3]		Cooling Output[2,3]		Load Calculations[3,4]		
				Per Design (kBtu/h)	Rated (kBtu/h)	Supp. Heating Output (kBtu/h)	Sensible Per Design (kBtu/h)	Rated (kBtu/h)	Total Heating Load (kBtu/h)	Total Sensible Cooling Load (kBtu/h)
HP-1, FC-1	Unitary Heat Pumps	Air-cooled, split (1phase)	Yes	25699	26000	0	29056	36000	12000	28000
HP-2, FC-2	Unitary Heat Pumps	Air-cooled, split (1phase)	NA: Standby Equipment	25699	26000	0	29056	36000	12000	28000

[1]*FOOTNOTES: Equipment shall be the smallest size, within the available options of the desired equipment line, necessary to meet the design heating and cooling loads of the building per §140.4(a). Healthcare facilities are excepted.*

[2]*It is common practice to show rated output capacity on the equipment schedule. Sensible cooling output comes from specification sheet tables.*

[3] *If equipment is heating only, leave cooling output and load blank. If equipment is cooling only, leave heating output and load blank.*

[4] *Authority Having Jurisdiction may ask for load calculations used for compliance per §140.4(b).*

Dry System Equipment Efficiency (other than Package Terminal Air Conditioners (PTAC) and Package Terminal Heat Pumps (PTHP))

01	02	03	04	05	06	07	08	09
Name or Item Tag	Size Category (Btu/h)	Heating Mode				Cooling Mode		
		Rating Condition (°F)	Efficiency Unit	Minimum Efficiency Required per Tables 110.2 / Title 20	Design Efficiency	Efficiency Unit	Minimum Efficiency Required per Tables 110.2 / Title 20	Design Efficiency
HP-1, FC-1	<65,000		HSPF	8.19	9.19	SEER	14	18.8
HP-2, FC-2	<65,000		HSPF	8.19	9.19	SEER	14	18.8

STATE OF CALIFORNIA
Mechanical Systems
NRCC-MCH-E — CALIFORNIA ENERGY COMMISSION

CERTIFICATE OF COMPLIANCE			**NRCC-MCH-E**
Project Name:	County of Sonoma Pine Mountain Antenna Communications Vault	**Report Page:**	**(Page 4 of 6)**
Project Address:	Pine Mountain Road, Cloverdale, CA	**Date Prepared:**	2022-10-27T17:00:45-04:00

G. PUMPS
This section does not apply to this project.

H. FAN SYSTEMS & AIR ECONOMIZERS
This section does not apply to this project.

I. SYSTEM CONTROLS

This table is used to demonstrate compliance with mandatory controls in §110.2 and §120.2 and prescriptive controls in §140.4(f) and (n) or requirements in §141.0(b)2E for altered space conditioning systems.

01	02	03	04	05	06	07	08	09
System Name	System Zoning	Conditioned Floor Area Being Served (ft^2)	Thermostats §110.2(b) & (c)[1], §120.2(a)or §141.0(b)2E	Shut-Off Controls §120.2(e)	Isolation Zone Controls §120.2(e)	Demand Response §110.12 and §120.2(b)	Supply Air Temp. Reset §140.4(f)	Window Interlocks per §140.4(n)
HP-1, FC-1, HP-2, FC-2	Single zone	<= 25,000 ft^2	Setback	NA: 7 day per §120.2(e)1	NA: Serves < 25k ft^2	NA: PTAC, PTHP, Rm AC, HP	NA: Single Zone	NA: No operable windows

[1]*FOOTNOTES: Gravity gas wall heaters, gravity floor heaters, gravity room heaters, non-central electric heaters, fireplaces or decorative gas appliances, wood stoves are not required to have setback thermostats.*

*Notes: Controls with a * require a note in the space below explaining how compliance is achieved. EX: system 1: SA Temp Reset: Exempt because zones compliant with §140.4(d) ; EXCEPTION 1 to §140.4(f)

J. VENTILATION AND INDOOR AIR QUALITY
This section does not apply to this project.

K. TERMINAL BOX CONTROLS
This section does not apply to this project.

L. DISTRIBUTION (DUCTWORK and PIPING)
This section does not apply to this project.

STATE OF CALIFORNIA
Mechanical Systems
NRCC-MCH-E — CALIFORNIA ENERGY COMMISSION

CERTIFICATE OF COMPLIANCE			**NRCC-MCH-E**
Project Name:	County of Sonoma Pine Mountain Antenna Communications Vault	**Report Page:**	**(Page 5 of 6)**
Project Address:	Pine Mountain Road, Cloverdale, CA	**Date Prepared:**	2022-10-27T17:00:45-04:00

M. COOLING TOWERS
This section does not apply to this project.

N. DECLARATION OF REQUIRED CERTIFICATES OF INSTALLATION
Selections have been made based on information provided in previous tables of this document. If any selection needs to be changed, please explain why in Table E Additional Remarks. These documents must be provided to the building inspector during construction and can be found online at https://www.energy.ca.gov/title24/2019standards/2019_compliance_documents/Nonresidential_Documents/NRCI/

Form/Title
NRCI-MCH-01-E - Must be submitted for all buildings

O. DECLARATION OF REQUIRED CERTIFICATES OF ACCEPTANCE
There are no NRCA forms required for this project.

P. DECLARATION OF REQUIRED CERTIFICATES OF VERIFICATION
There are no NRCV forms required for this project.

Q. MANDATORY MEASURES DOCUMENTATION LOCATION
This table is used to indicate where mandatory measures are documented in the plan set or construction documentation.

01		02
Compliance with Mandatory Measures documented through MCH Mandatory Measures Note Block	Yes	M1.1

STATE OF CALIFORNIA
Mechanical Systems
NRCC-MCH-E — CALIFORNIA ENERGY COMMISSION

CERTIFICATE OF COMPLIANCE			**NRCC-MCH-E**
Project Name:	County of Sonoma Pine Mountain Antenna Communications Vault	**Report Page:**	**(Page 6 of 6)**
Project Address:	Pine Mountain Road, Cloverdale, CA	**Date Prepared:**	2022-10-27T17:00:45-04:00

DOCUMENTATION AUTHOR'S DECLARATION STATEMENT

I certify that this Certificate of Compliance documentation is accurate and complete.

Documentation Author Name: Trevor Lefler	Documentation Author Signature: Trevor Lefler
Company: Lefler Engineering, Inc.	Signature Date: 10/27/22
Address: 1651 2nd St	CEA/ HERS Certification Identification (if applicable):
City/State/Zip: San Rafael, CA 94901	Phone: 415-456-4220

RESPONSIBLE PERSON'S DECLARATION STATEMENT

I certify the following under penalty of perjury, under the laws of the State of California:

1. The information provided on this Certificate of Compliance is true and correct.
2. I am eligible under Division 3 of the Business and Professions Code to accept responsibility for the building design or system design identified on this Certificate of Compliance (responsible designer)
3. The energy features and performance specifications, materials, components, and manufactured devices for the building design or system design identified on this Certificate of Compliance conform to the requirements of Title 24, Part 1 and Part 6 of the California Code of Regulations.
4. The building design features or system design features identified on this Certificate of Compliance are consistent with the information provided on other applicable compliance documents, worksheets, calculations, plans and specifications submitted to the enforcement agency for approval with this building permit application.
5. I will ensure that a completed signed copy of this Certificate of Compliance shall be made available with the building permit(s) issued for the building, and made available to the enforcement agency for all applicable inspections. I understand that a completed signed copy of this Certificate of Compliance is required to be included with the documentation the builder provides to the building owner at occupancy.

Responsible Designer Name: Trevor Lefler	Responsible Designer Signature: Trevor Lefler
Company: Lefler Engineering, Inc.	Date Signed: 10/27/22
Address: 1651 2nd St	License: 37725
City/State/Zip: San Rafael, CA 94901	Phone: 415-456-4220

ARCHITECT:
AXIA ARCHITECTS
540 Mendocino Ave, Santa Rosa, CA 95401
707 542 4652
axiaarchitects.com

CONSULTANT:
LEFLER ENGINEERING, INC.
1651 Second Street
San Rafael, CA 94901
(415) 456-4220
(415) 456-1249 fax
MECHANICAL PLUMBING FIRE PROTECTION

Sonoma County Facilities Development & Management

PINE MOUNTAIN ANTENNA COMMUNICATIONS BUILDING RECONSTRUCTION

33550 PINE MOUNTAIN RD., CLOVERDALE, CA 95425 APN: 117-240-051

SEAL:
REGISTERED PROFESSIONAL ENGINEER TREVOR M. LEFLER Exp. 3-31-26 M 37725 MECHANICAL STATE OF CALIFORNIA

Date Stamped: 4/7/2025 Permit No: RES-25-00000 Ronald Morris
REVIEWED FOR CODE COMPLIANCE - PERMIT SONOMA

SHEET LOG

REV #	DATE:	ISSUED FOR:
2	11/04/22	PERMIT RESUBMISSION
	3/27/2024	50% CD Drawings
	4/30/2024	100% CD Drawings
	3/21/2025	Structural Wall Revision

JOB NUMBER: 1191

SHEET:
M3.1
TITLE 24

ORIGINAL DATE: APRIL 30, 2024

© AXIA ARCHITECTS

3/21/2024 11:10:29 AM C:\Users\Sratley\Documents\REVIT\1191 Pine Mtn Rd Comm Vault_C_sratleyS9ADW.rvt

ELECTRICAL LEGEND

ABBREVIATIONS

A.F.F.	ABOVE FINISHED FLOOR
(E)	EXISTING
(N)	NEW
U.O.N.	UNLESS OTHERWISE NOTED
A	AMPS
C	CONDUIT
G	GROUND
V	VOLTS
WP	WEATHER PROOF

DEVICES

- DUPLEX RECEPTACLE 125V, 20A, 3PG, +18" A.F.F. U.O.N.
- QUADPLEX RECEPTACLE 125V, 20A, 3PG, +18" A.F.F. U.O.N.
- GFI DUPLEX GFCI RECEPTACLE 125V, 20A, 3PG, +18" A.F.F. U.O.N.
- DUPLEX CONTROLLED RECEPTACLE 125V, 15A, 3PG, +18" A.F.F. U.O.N.
- SINGLE RECEPTACLE SEE PLANS FOR TYPE
- DATA/VOICE OUTLET +18" A.F.F

LIGHTING

- F1 LIGHTING FIXTURE TAG – SEE FIXTURE SCHEDULE
- 1' X 4' SURFACE LIGHT FIXTURE
- OUTDOOR WALL MOUNT FIXTURE
- EMERGENCY LIGHT WITH 90 MINUTE BATTERY BACK-UP

LIGHTING DEVICES

- $ TOGGLE SWITCH 120V, 15A, 1 POLE +48" A.F.F. TO TOP OF BOX
- D DIMMER SWITCH +48" A.F.F. TO TOP OF BOX
- OS OCCUPANCY SENSOR– WALL MOUNT +48" A.F.F. TO TOP OF BOX
- OS OCCUPANCY SENSOR– CEILING MOUNT
- PP POWER PACK

TYPE	DESCRIPTION	MANUFACTURER	CATALOG NUMBER	DRIVER	LAMP(S)	WATTS	VOLTAGE
F1	2' LED STRIP LIGHT WITH LENS	LITHONIA	CSS L24 AL015 MVOLT SWW3 80CRI	0–10V	LED– 3500K COLOR SELECTABLE	13	120V
F2	OUTDOOR LED SECURITY LIGHT 2–HEAD SURFACE MOUNT WITH MOTION SENSOR DUSK TO DAWN	SANSI OR EQUAL	32W		LED– 5000K 3600 LUMENS	36	120V

1 LIGHTING FIXTURE SCHEDULE

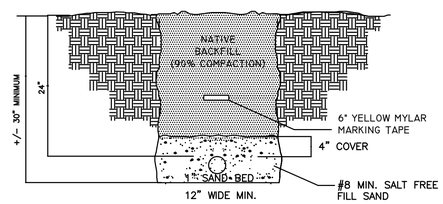

NOTES:

1. ELECTRIC CONDUIT (UL APPROVED) PVC SCHEDULE 40.
2. USE PVC SCHEDULE 80 AT EXPOSED ABOVEGROUND 90 DEGREE STUB-UP LOCATIONS.

2 TRENCH DETAIL
SCALE: NONE

POWER DISTRIBUTION

- SURFACE MOUNTED ELECTRICAL PANEL 6'–6" TO TOP
- FLUSH MOUNTED ELECTRICAL PANEL 6'–6" TO TOP
- T TRANSFORMER
- F FUSED SAFETY SWITCH HEAVY DUTY. VOLTAGE AND FUSE SIZE CALLED OUT ON PLANS
- NON–FUSED SAFETY SWITCH HEAVY DUTY
- $ 120V, 15A, 1P TOGGLE SWITCH
- TC TIME CLOCK

HVAC AND PLUMBING

- EF 1 MECHANICAL EQUIPMENT TAG– SEE MECHANICAL DRAWINGS
- P 1 PLUMBING EQUIPMENT TAG– SEE PLUMBING DRAWINGS
- EXHAUST FAN
- T THERMOSTAT BY MECHANICAL

CONDUIT

- ABOVEGROUND CONDUIT
- UNDERGROUND CONDUIT
- J J 4–11/16" SQUARE TYPE JUNCTION BOX WITH BLANK COVER PLATE
- CONDUIT HOMERUN TO PANELBOARD
- NEUTRAL, HOT, GROUND WIRING IDENTIFICATION

ELECTRICAL DRAWING LIST

E0.1 ELECTRICAL COVER SHEET AND DETAILS
E1.0 ELECTRICAL SITE PLAN
E2.0 ELECTRICAL DEMOLITION PLANS
E3.0 ELECTRICAL NEW PLANS
E4.0 ONE LINE DIAGRAM AND PANEL SCHEDULE
E5.0 TITLE 24 INDOOR LIGHTING
E6.0 TITLE 24 OUTDOOR LIGHTING

GENERAL NOTES:

1. ALL DEVICES AND EQUIPMENT SHOWN ARE NEW UNLESS OTHERWISE NOTED.
2. DRAWINGS INDICATES THE LOCATION OF DEVICES & EQUIPMENT. IT ALSO INDICATES THE CIRCUIT NUMBER AND PANEL DESIGNATION WHICH SUPPLIES THEM. THE CONTRACTOR SHALL BE RESPONSIBLE FOR COMPLETELY CONNECTING ALL ELECTRICAL DEVICES TO THE CIRCUITS INDICATED ON DRAWING.
3. CONTRACTOR SHALL PROVIDE & INSTALL A #12 AWG GREEN COPPER THHN GROUNDING CONDUCTOR IN ALL POWER CIRCUITS, BRANCH CIRCUITS & HOMERUNS (UNLESS OTHERWISE NOTED).
4. RECEPTACLES AND SWITCHES INTENDED TO BE USED BY OCCUPANT SHALL HAVE A LOW REACH OF 15" MEASURED TO THE BOTTOM OF THE OUTLET BOX AND THE HIGH REACH OF 48" MEASURED TO THE TOP OF THE OUTLET BOX. CBC 11B–308.
5. CONTRACTOR SHALL COORDINATE WITH ANY OTHER APPROPRIATE TRADES PRIOR TO INSTALLATION OF ANY BOXES OR CONDUIT IN ORDER TO AVOID ANY CONFLICTING INSTALLATIONS.
6. PROVIDE PULL LINE IN ALL SPARE CONDUITS AND IN CONDUITS DESIGNATED AS CONDUIT ONLY.
7. CONDUIT ROUTING SHOWN IS APPROXIMATE EXACT ROUTING TO BE DETERMINED IN FIELD.
8. ALL NEW CABLES ARE THHN/THWN COPPER.
9. ALL ELECTRICAL WORK SHALL COMPLY TO CBC 2022, CEC 2022, AND NEC 2022.
10. PROVIDE SUBMITTALS ON LIGHT FIXTURES AND ELECTRICAL PANELS FOR APPROVAL WITHIN 30 DAYS OF STARTING WORK.
11. AT THE COMPLETION OF THE PROJECT PROVIDE COPIES OF THE NONRESIDENTIAL CERTIFICATES (NRCA) FOR NEW LIGHTING SYSTEMS TO THE BUILDING DEPARTMENT. THESE FORMS ARE CONFIRMATION THE CONTROLS HAVE BEEN TESTED AND ARE WORKING PROPERLY. THE TESTING OF THE CONTROLS SYSTEMS AND THE COMPLETION OF THE NRCA FORMS MUST BE DONE BY A THIRD PARTY INSPECTOR.
12. ANOTHER FORM THE BUILDING DEPARTMENT MAY REQUEST FOR THE LIGHTING SYSTEM IS THE NONRESIDENTAIL CERTIFICATE OF INSTALLATION (NRCL) WHICH CAN BE COMPLETED BY THE INSTALLING CONTRACTOR.

ARCHITECT:
AXIA ARCHITECTS
540 Mendocino Ave, Santa Rosa, CA 95401
707-542-4652
axiaarchitects.com

CONSULTANT:
Engineering Enterprises Inc.
Electrical Engineering and Designs
613 4th Street Suite 206
Santa Rosa, Ca 95404
707-544-7775
mi□e□ engineering-enterprises.com

Sonoma County Facilities Development & Management

PINE MOUNTAIN ANTENNA COMMUNICATIONS BUILDING RECONSTRUCTION

33550 PINE MOUNTAIN RD., CLOVERDALE, CA 95425 APN: 117-240-051

SEAL:
REGISTERED PROFESSIONAL ENGINEER 06.05.24 MICHAEL JOHNSTON NO. E 15586 EXP. 12-31-25 ELECTRICAL STATE OF CALIFORNIA
Mike Johnston

SHEET LOG

REV #	DATE:	ISSUED FOR:

Date Signed: 4/7/2025 Permit #: BLD24-4425 Plans Examiner: Ronald Morris
REVIEWED FOR CODE COMPLIANCE - PERMIT SONOMA

JOB NUMBER: 1191

SHEET:

E0.1

ELECTRICAL COVER SHEET AND DETAILS

ORIGINAL DATE: JUNE 7, 2024

© AXIA ARCHITECTS

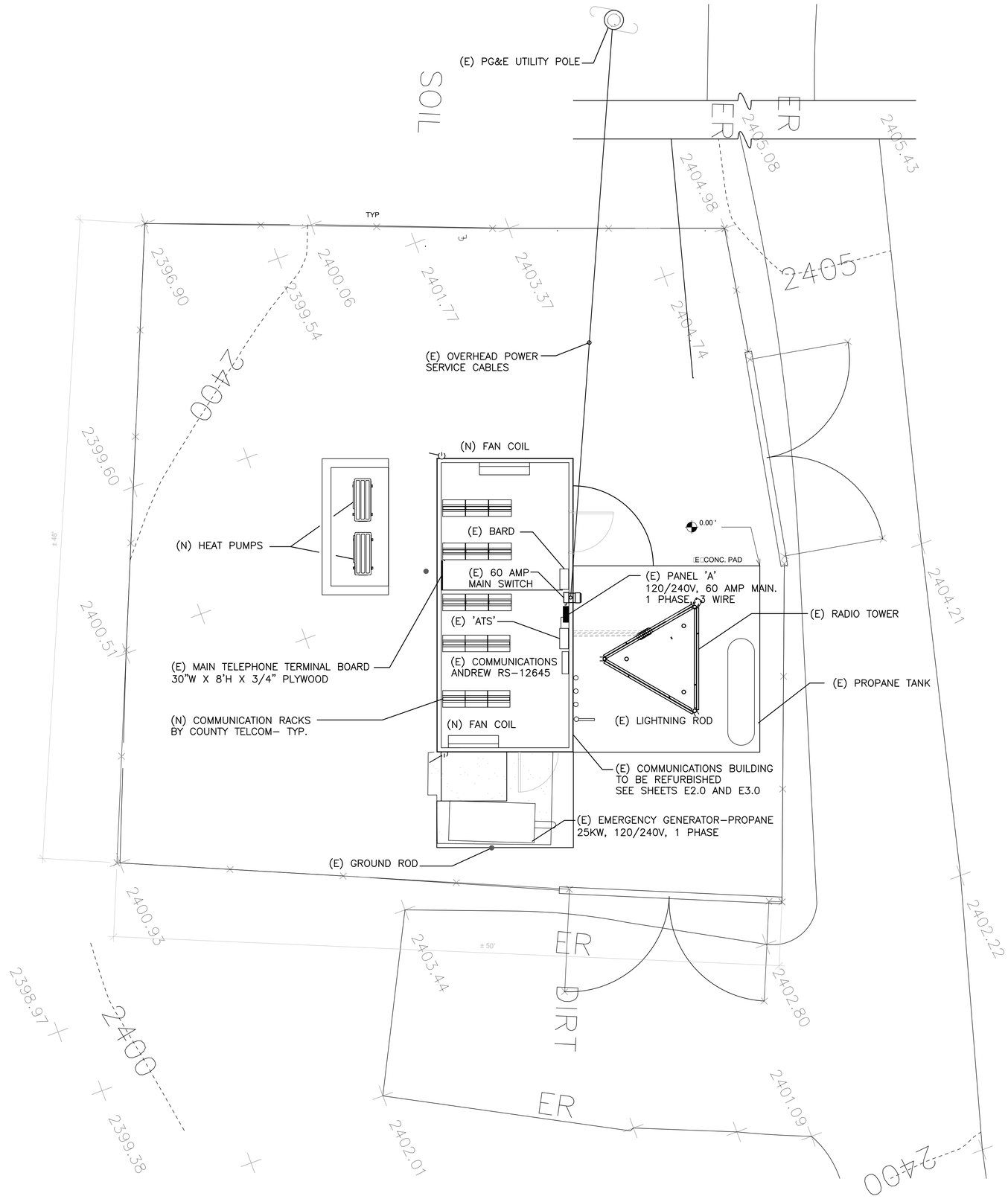

ELECTRICAL SITE PLAN

1/4" = 1'-0"

ARCHITECT:

AXIA ARCHITECTS
540 Mendocino Ave, Santa Rosa, CA 95401
707 542.4652
axiaarchitects.com

CONSULTANT:

Engineering Enterprises Inc.
Electrical Engineering and Designs
613 4th Street Suite 206
Santa Rosa, Ca. 95404
707-544-7775
mi□e□ engineering-enterprises.com

Sonoma County Facilities Development & Management

PINE MOUNTAIN ANTENNA COMMUNICATIONS BUILDING RECONSTRUCTION

33550 PINE MOUNTAIN RD., CLOVERDALE, CA 95425 APN: 117-240-051

SEAL:

REGISTERED PROFESSIONAL ENGINEER
06.04.24
MICHAEL JOHNSTON
NO. E 15586
EXP. 12-31-25
ELECTRICAL
STATE OF CALIFORNIA

Mike Johnston

Date Stamped: 4/7/2025 Permit # BLD24-4631 Plans Examiner: Ronald Morris
REVIEWED FOR CODE COMPLIANCE - PERMIT SONOMA

SHEET LOG

REV #	DATE:	ISSUED FOR:

JOB NUMBER: 1191

SHEET:

E1.0

ELECTRICAL SITE PLAN

ORIGINAL DATE: JUNE 7, 2024

© AXIA ARCHITECTS

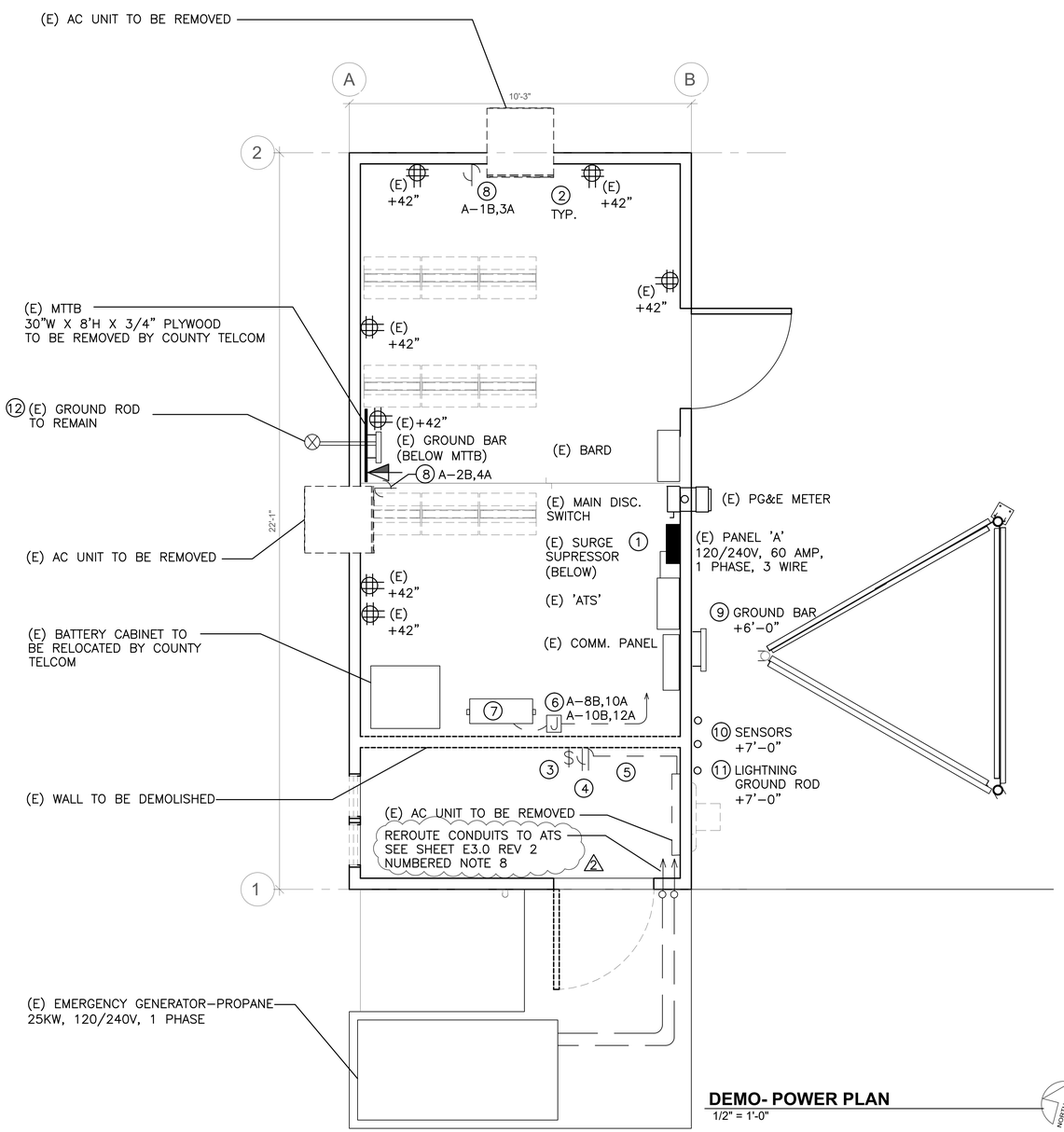

DEMO- POWER PLAN

1/2" = 1'-0"

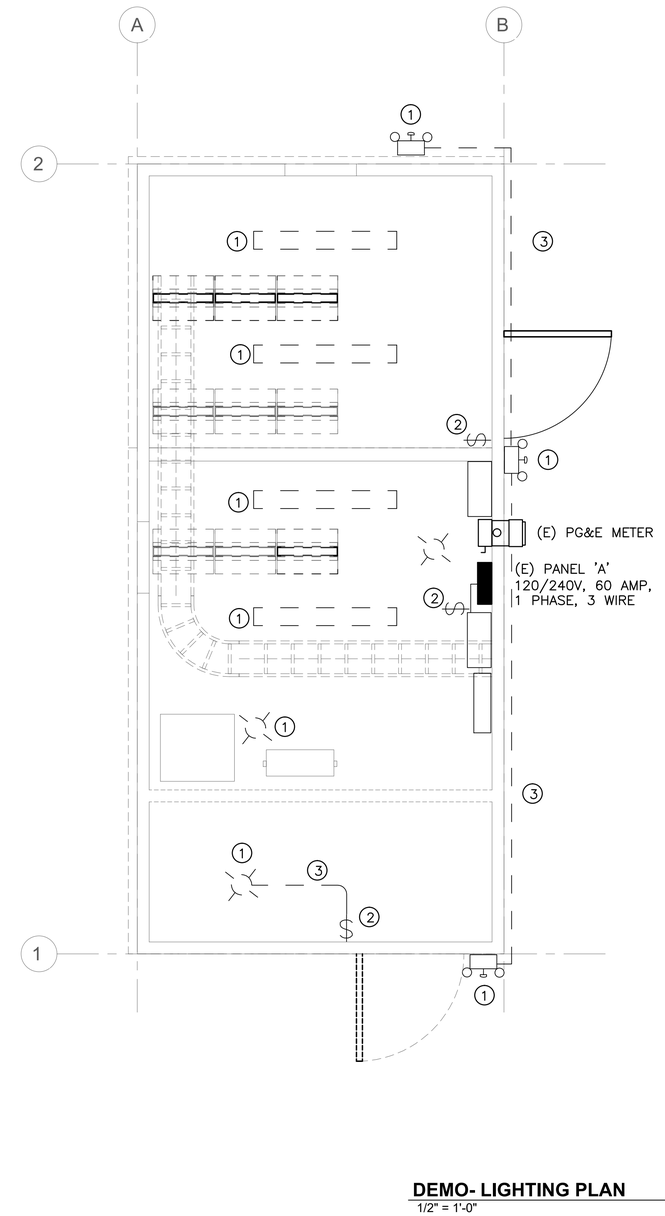

DEMO- LIGHTING PLAN

1/2" = 1'-0"

NUMBERED NOTES:

1. COVER AND PROTECT (E) PANELS AND EQUIPMENT ON WALL. BUILDING INTERIOR AND EXTERIOR SHALL BE REMODELED/REFURBISHED. SEE ARCHITECTURAL DRAWINGS.
2. COVER AND PROTECT (E) OUTLETS.
3. REMOVE (E) SWITCH.
4. REMOVE (E) OUTLET
5. REMOVE (E) CONDUIT.
6. DISCONNECT AND REMOVE (E) CONDUIT AND CABLES TO (E) 48 VOLT CHARGER. DISCONNECT AND REMOVE CABLES AT PANEL 'A'.
7. (E) 48 VOLT CHARGERS TO BE RELOCATED BY COUNTY TELCOM.
8. REMOVE (E) OUTLET FOR AC UNIT. DISCONNECT AND REMOVE (E) CIRCUIT AT PANEL 'A'
9. TEMPORARILY REMOVE GROUND BAR FROM BUILDING. REMOUNT GROUND BAR AFTER RESTORATION WORK IS COMPLETE. PROVIDE (N) MOUNTING HARDWARE AS REQUIRED.
10. TEMPORARILY REMOVE SENSORS FROM BUILDING. REMOUNT SENSORS AFTER RESTORATION WORK IS COMPLETE. PROVIDE (N) MOUNTING HARDWARE AS REQUIRED.
11. TEMPORARILY REMOVE LIGHTNING GROUND ROD FROM BUILDING. REMOUNT SENSORS AFTER RESTORATION WORK IS COMPLETE. PROVIDE (N) MOUNTING HARDWARE AS REQUIRED.
12. PRESERVE AND PROTECT GROUND CABLES FROM GROUND BAR IN ROOM.

GENERAL NOTES:

1. REFER TO ARCHITECTURAL DRAWINGS FOR PHASING OF WORK.
2. COUNTY TELCOM GROUP SHALL BE RESPONSIBLE FOR ALL EXTERIOR AND INTERIOR COMMUNICATION CABLES, LOW VOLTAGE CABLES, CABLE TRAY, BATTERY CABINET, AND COMMUNICATION RACKS.

NUMBERED NOTES:

1. REMOVE (E) LIGHT FIXTURE
2. REMOVE (E) LIGHT SWITCH.
3. REMOVE (E) CONDUIT.

ARCHITECT:
AXIA ARCHITECTS
540 Mendocino Ave, Santa Rosa, CA 95401
707 542.4652
axiaarchitects.com

CONSULTANT:
Engineering Enterprises Inc.
Electrical Engineering and Designs
613 4th Street Suite 206
Santa Rosa, Ca. 95404
707-544-7775
mi□e□ engineering-enterprises.com

Sonoma County Facilities Development & Management

PINE MOUNTAIN ANTENNA COMMUNICATIONS BUILDING RECONSTRUCTION

33550 PINE MOUNTAIN RD., CLOVERDALE, CA 95425 APN: 117-240-051

SEAL:

REGISTERED PROFESSIONAL ENGINEER
06.05.24
MICHAEL JOHNSTON
NO. E 15586
EXP. 12-31-25
ELECTRICAL
STATE OF CALIFORNIA
Mike Johnston

SHEET LOG

REV #	DATE:	ISSUED FOR:
2	3/21/25	PERMIT RESUBMITTAL

Date Stamped: 4/7/2025 Permit #: 24-1453-R01 Plans Examiner: Ronald Morris
REVIEWED FOR CODE COMPLIANCE - PERMIT SONOMA

JOB NUMBER: 1191

SHEET:

E2.0

ELECTRICAL DEMOLITION PLANS

ORIGINAL DATE: JUNE 7, 2024

© AXIA ARCHITECTS

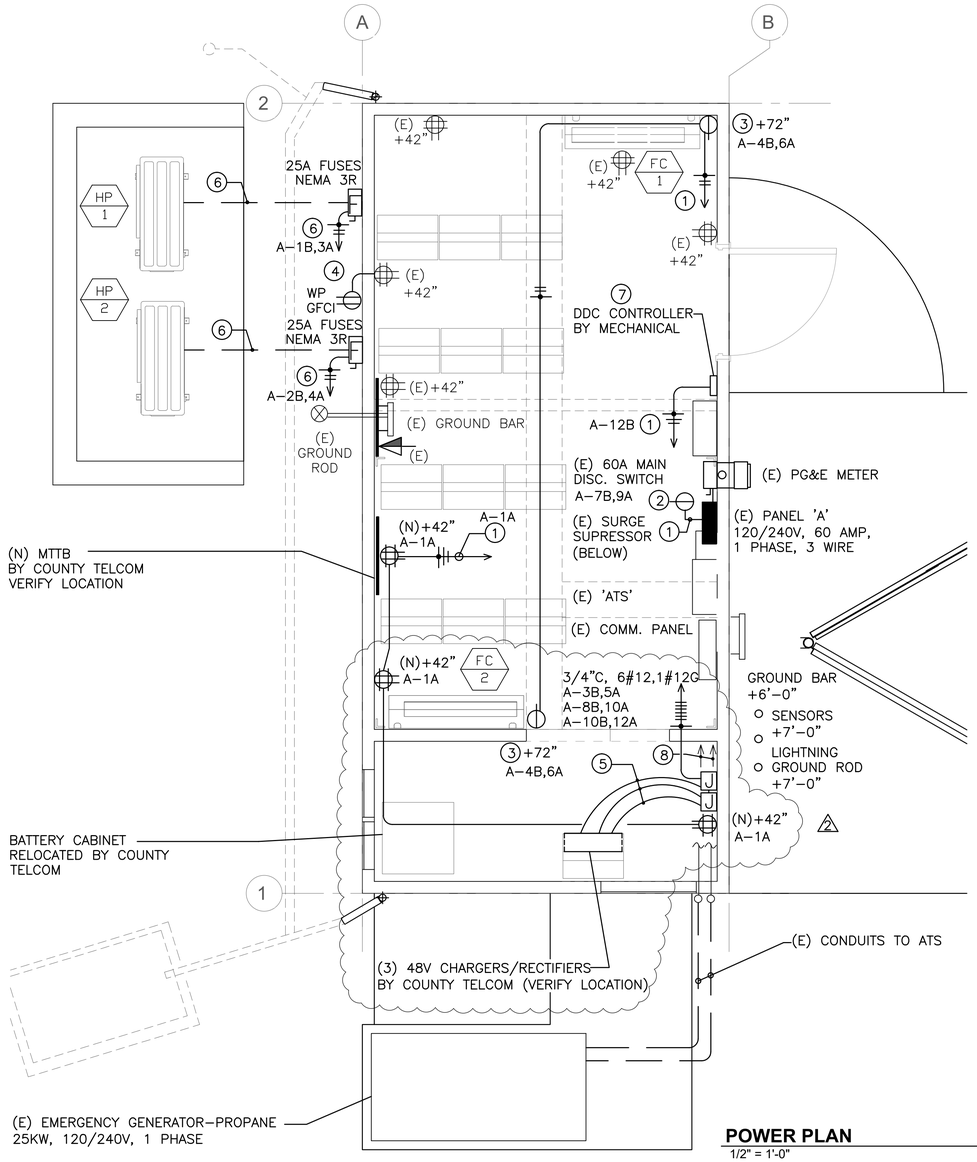

POWER PLAN

1/2" = 1'-0"

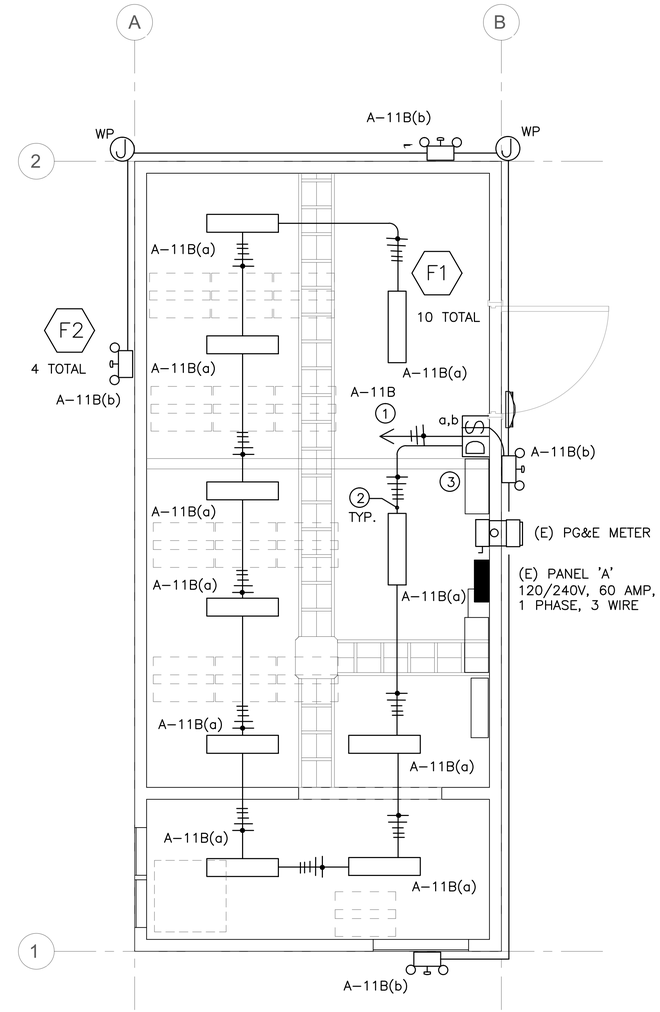

LIGHTING PLAN

1/2" = 1'-0"

NORTH

NUMBERED NOTES:

1. 3/4"C, 2#12, 1#12G
2. (N) 20A, 250V, NEMA 6–20R SINGLE RECEPTACLE FOR USE BY COUNTY TELCOM DURING REMODEL.
3. (N) 15A, 250V, NEMA 6–15R SINGLE RECEPTACLE. COORDINATE LOCATION OF OUTLET WITH MECHANICAL. 2
4. CONNECT TO (E) 120V RECEPTACLE CIRCUIT IN BUILDING. PROVIDE (N) 3/4"C, 2#12, 1#12G TO (N) WP GFCI OUTLET OUTLET.
5. (3) 3/4"C, 2#12, 1#12G FLEXIBLE METALLIC CONDUITS. CONNECT 240V, 20 AMP CIRCUIT TO EACH 48 VOLT CHARGER/RECTIFIER.
6. 3/4"C, 2#10, 1+10G
7. LOCATE ON WALL IN AVAILABLE SPACE.
8. 2 REROUTE (E) INTERIOR CONDUITS FROM GENERATOR AROUND (N) STRUCTURAL COLUMN. REMOVE (E) CABLING AND REPLACE WITH NEW. ASSUME THE FOLLOWING CONDUITS AND CABLES. VERIFY IN FIELD.

   1–1/2"C, 3#2, 1#8G (POWER TO ATS)
   2#12, 1#12 (POWER TO BATTERY CHARGER FROM PANEL 'A')
   3/4"C, 3/C #18 (CONTROL TO ATS)

NUMBERED NOTES:

1. 3/4"C, 2#12, 1#12G.
2. MC LUMINARY CABLE AFC–42–504 16–2, 12–2, 12G
3. 0–10V DIMMER SWITCH LUTRON DIVA DVSTV.

ARCHITECT:

AXIA ARCHITECTS
540 Mendocino Ave, Santa Rosa, CA 95401
707 542 4652
axiaarchitects.com

CONSULTANT:

Engineering Enterprises Inc.
Electrical Engineering and Designs
613 4th Street Suite 206
Santa Rosa, Ca. 95404
707.544-7775
mail@engineering-enterprises.com

Sonoma County Facilities Development & Management

PINE MOUNTAIN ANTENNA COMMUNICATIONS BUILDING RECONSTRUCTION

33550 PINE MOUNTAIN RD., CLOVERDALE, CA 95425 APN: 117-240-051

SEAL:

REGISTERED PROFESSIONAL ENGINEER
03.21.25
MICHAEL JOHNSTON
NO. E 15586
EXP. 12–31–25
ELECTRICAL
STATE OF CALIFORNIA

Mike Johnston

SHEET LOG

REV #	DATE:	ISSUED FOR:
2	3/21/25	PERMIT RESUBMITTAL

Date Stamped: 4/7/2025 Permit #: BLD24-42-C01 Plans Examiner: Ronald Morris
REVIEWED FOR CODE COMPLIANCE - PERMIT SONOMA

JOB NUMBER: 1191

SHEET:

E3.0

ELECTRICAL NEW PLANS

ORIGINAL DATE: JUNE 7, 2024

© AXIA ARCHITECTS

(E) PANEL A
120/240V, 100 AMP BUS 1Ø, 3 WIRE

MAIN : 60 AMP
MOUNTING: SURFACE
ENCLOSURE: NEMA 1
AIC RATING: 10KAIC
FEED: TOP

	SERVICE	LOAD VA AØ	LOAD VA BØ	BKR. SIZE	CKT. NO.	CKT. NO.	BKR. SIZE	LOAD VA AØ	LOAD VA BØ	SERVICE	
(E) AC CONTROL PANEL NOTE 2	(N) PLUGS	1080	—	20A	1A	2A	15A		—	(E) ONAN CLOCK	
NOTES 1,2	(N) HP-1 OUTDOOR	1080		30A	1B	2B	30A	1080		(N) HP-2 OUTDOOR	NOTES 1,2
(E) 12 VOLT CHARGER A	(N) HP-1 OUTDOOR	—	1080	30A	3A	4A	30A	—	1080	(N) HP-2 OUTDOOR	
(E) 12 VOLT CHARGER A NOTE 2	(N) 48 VOLT CHARGER C		1400	20A	3B	4B	15A		140	(N) PLUGS-FAN COILS 1 AND 2	NOTE 2
	(N) 48 VOLT CHARGER C	1400		20A	5A	6A	15A	140	—	(N) PLUGS-FAN COILS 1 AND 2	(E) 12 VOLT CHARGER B
	(E) PLUGS	540		20A	5B	6B	15A	180		(E) 110 PLUG AT RIGHT	(E) 12 VOLT CHARGER B
	(E) PLUGS	—	540	20A	7A	8A	15A	—	720	(E) PLUGS	
(E) 12 VOLT CHARGER A	(N) TEMPORARY 240V PLUG			20A	7B	8B	20A		1400	(N) 48 VOLT CHARGER A	
(E) 12 VOLT CHARGER A NOTE 2	(N) TEMPORARY 240V PLUG		—	20A	9A	10A	20A	1400	—	(N) 48 VOLT CHARGER A	
(E) 12 VOLT CHARGER B	SPARE			20A	9B	10B	20A	1400		(N) 48 VOLT CHARGER B	
(E) 12 VOLT CHARGER B NOTE 2	SPARE	—		20A	11A	12A	20A	—	1400	(N) 48 VOLT CHARGER B	
	(N) LIGHTS		275	20A	11B	12B	20A		100	(N) DDC CONTROLLER	
	SUB-TOTAL	4100	3295					4200	4840		

AØ BØ
60A 2P

TOTAL CONNECTED LOAD:

PHASE A 8300 VA
PHASE B 8135 VA
TOTAL VA 16435 VA

*** CONNECTED LOAD WITH HP-2 AND FC-2 AS BACK-UP:

PHASE A 7220 VA
PHASE B 7055 VA
TOTAL VA 14275 VA
TOTAL AMPS 59 AMPS

*** HP-2/FC-2 ARE BACK-UP UNITS AND ONLY OPERATE IF HP-1/FC-1 MECHANICALLY FAIL. SEE MECHANICAL DRAWINGS.

PANEL SCHEDULE NOTES

1. PROVIDE (N) 240V, 30A, 2 POLE CIRCUIT BREAKER GE THQP230.
2. DISCONNECT AND REMOVE (E) CIRCUIT FROM PANEL PROVIDE (N) CIRCUIT SHOWN.
3. PROVIDE (N) TYPED PANEL SCHEDULE DIRECTORY CARD WITH UPDATED ELECTRICAL LOAD LIST.

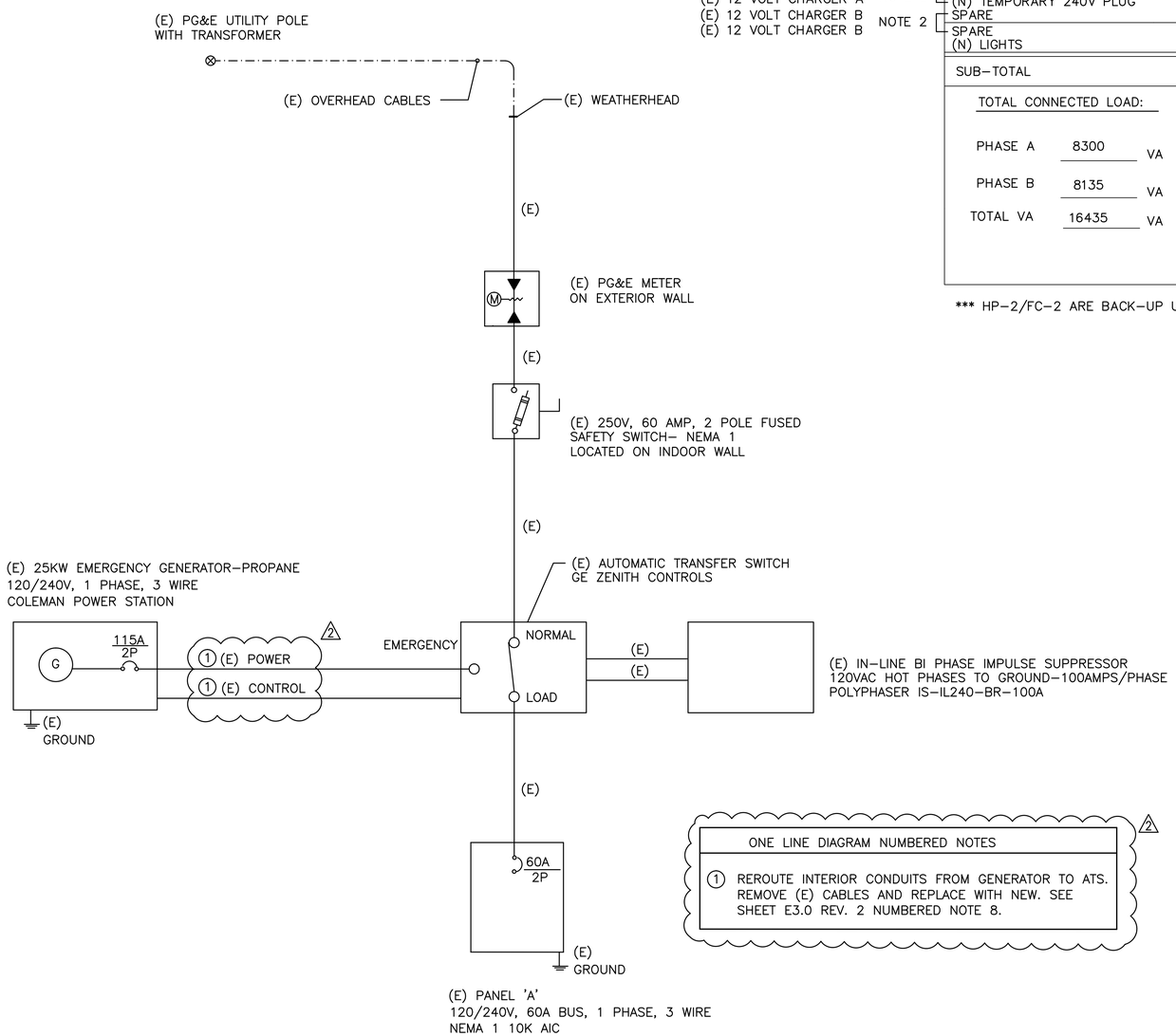

ONE LINE DIAGRAM NUMBERED NOTES

1. REROUTE INTERIOR CONDUITS FROM GENERATOR TO ATS. REMOVE (E) CABLES AND REPLACE WITH NEW. SEE SHEET E3.0 REV. 2 NUMBERED NOTE 8.

NOTE: INFORMATION SHOWN ON ONE LINE DIAGRAM DRAWING IS BASED ON FIELD SURVEY OF (E) CONDITIONS

(E) ONE LINE DIAGRAM

ARCHITECT:
AXIA ARCHITECTS
540 Mendocino Ave, Santa Rosa, CA 95401 707 542 4652 axiaarchitects.com

CONSULTANT:
Engineering Enterprises Inc.
Electrical Engineering and Designs
613 4th Street Suite 206
Santa Rosa, Ca. 95404
707 544-1775
mi@engineeringenterprises.com

Sonoma County Facilities Development & Management

PINE MOUNTAIN ANTENNA COMMUNICATIONS BUILDING RECONSTRUCTION

33550 PINE MOUNTAIN RD., CLOVERDALE, CA 95425 APN: 117-240-051

SEAL:
REGISTERED PROFESSIONAL ENGINEER
06.05.24
MICHAEL JOHNSTON
NO. E 15586
EXP. 12-31-25
ELECTRICAL
STATE OF CALIFORNIA
Mike Johnston

Date Stamped: 4/7/2025 Permit #: E-2024-45 R01 Plans Examiner: Ronald Morris
REVIEWED FOR CODE COMPLIANCE - PERMIT SONOMA

SHEET LOG

REV #	DATE:	ISSUED FOR:
2	3/21/25	PERMIT RESUBMITTAL

JOB NUMBER: 1191

SHEET:
E4.0
ONE LINE DIAGRAM AND PANEL SCHEDULE

ORIGINAL DATE: JUNE 7, 2024

© AXIA ARCHITECTS

STATE OF CALIFORNIA
Indoor Lighting
NRCC-LTI-E — CALIFORNIA ENERGY COMMISSION

CERTIFICATE OF COMPLIANCE			NRCC-LTI-E
This document is used to demonstrate compliance with requirements in §110.9, §110.12(c), §130.0, §130.1, §140.6 and §141.0(b)2 for indoor lighting scopes using the prescriptive path.			
Project Name:	Pine Mountain Communications Vault	**Report Page:**	**(Page 1 of 7)**
Project Address:	Pine Mountain Road	**Date Prepared:**	4/26/2024

A. GENERAL INFORMATION

01	Project Location (city)	Cloverdale	04	Total Conditioned Floor Area (ft^2)	226
02	Climate Zone	2	05	Total Unconditioned Floor Area (ft^2)	0
03	Occupancy Types Within Project (select all that apply):		06	# of Stories (Habitable Above Grade)	1

• : See Table I

B. PROJECT SCOPE
This table includes any lighting systems that are within the scope of the permit application and are demonstrating compliance using the prescriptive path outlined in §140.6 or §141.0(b)2 for alterations.

Scope of Work	Conditioned Spaces		Unconditioned Spaces	
01	02	03	04	05
My Project Consists of (check all that apply):	Calculation Method	Area (ft^2)	Calculation Method	Area (ft^2)
☒ New Lighting System	Area Category Method	226	Area Category Method	0
☐ New Lighting System - Parking Garage				
Total Area of Work (ft^2)	226		0	

C. COMPLIANCE RESULTS
If any cell on this table says "DOES NOT COMPLY" or "COMPLIES with Exceptional Conditions" refer to Table D. for guidance.

Lighting in conditioned and unconditioned spaces must not be combined for compliance per §140.6(b)1	Allowed Lighting Power per §140.6(b) (Watts)						Adjusted Lighting Power per §140.6(a) (Watts)				Compliance Results
	01	02	03	04		05	06	07		08	09
	Complete Building §140.6(c)1 (See Table I)	Area Category §140.6(c)2 (See Table I)	Area Category Additional §140.6(c)2G (+) (See Table J)	Tailored §140.6(c)3 (+) (See Table K)	=	**Total Allowed** (Watts)	≥ Total Designed (Watts) (See Table F)	Adjustments: PAF Lighting Control Credits §140.6(a)2 (-) (See Table P)	=	**Total Adjusted** (Watts) *Includes Adjustments	**05 must be >= 08 §140.6**
Conditioned		90.4	45.2		=	135.6	≥ 130	0	=	130	COMPLIES
Unconditioned					=		≥		=		

STATE OF CALIFORNIA
Indoor Lighting
NRCC-LTI-E — CALIFORNIA ENERGY COMMISSION

CERTIFICATE OF COMPLIANCE			NRCC-LTI-E
Project Name:	Pine Mountain Communications Vault	**Report Page:**	**(Page 2 of 7)**
Project Address:	Pine Mountain Road	**Date Prepared:**	4/26/2024

C. COMPLIANCE RESULTS

Controls Compliance (See Table H for Details)	COMPLIES
Rated Power Reduction Compliance (See Table Q for Details)	

D. EXCEPTIONAL CONDITIONS
This table is auto-filled with uneditable comments because of selections made or data entered in tables throughout the form.

E. ADDITIONAL REMARKS
This table includes remarks made by the permit applicant to the Authority Having Jurisdiction.

F. INDOOR LIGHTING FIXTURE SCHEDULE
This table includes all permanent designed lighting and all portable lighting in offices.

Designed Wattage: Conditioned Spaces

01	02	03	04	05	06	07	08	09	10	
Name or Item Tag	Complete Luminaire Description	Modular (Track) Fixture	Small Aperture & Color Change[1]	Watts per luminaire[2]	How is Wattage determined	Total Number of Luminaires	Excluded per §140.6(a)3	Design Watts	Field Inspector: Pass	Fail
								--	☐	☐
F1	2' linear 13w LED	No	No	13	Mfr. Spec	10	No	130	☐	☐
							Total Designed Watts: CONDITIONED SPACES	130		

[1]*FOOTNOTE: Design Watts for small aperture and color changing luminaires which qualify per §140.6(a)4B is adjusted to be 75% of their rated wattage. Table F automatically makes this adjustment, the permit applicant should enter full rated wattage in column 05.*

[2]*Authority Having Jurisdiction may ask for Luminaire cut sheets to confirm wattage used for compliance per §130.0(c) Wattage used must be the maximum rated for the luminaire, not the lamp.*

G. MODULAR LIGHTING SYSTEMS
This section does not apply to this project.

STATE OF CALIFORNIA
Indoor Lighting
NRCC-LTI-E — CALIFORNIA ENERGY COMMISSION

CERTIFICATE OF COMPLIANCE			NRCC-LTI-E
Project Name:	Pine Mountain Communications Vault	**Report Page:**	**(Page 3 of 7)**
Project Address:	Pine Mountain Road	**Date Prepared:**	4/26/2024

H. INDOOR LIGHTING CONTROLS (Not including PAFs)
*This table includes lighting controls for conditioned and unconditioned spaces. When a control having a * is shown, the notes section of this table provides more detail on how compliance is achieved. The lighting controls section of the Compliance Summary Table on the first page will show "DOES NOT COMPLY" if the notes are left blank.*

Building Level Controls

01	02	03 Field Inspector: Pass	Fail
Mandatory Demand Response §110.12(c)	Shut-off controls §130.1(c)		
Not Required <= 10,000 SF	See Area/Space Level Controls	☐	☐

Area Level Controls

04	05	06	07	08	09	10	11	12	
Area Description	Complete Building or Area Category Primary Function Area	Area Controls §130.1(a)	Multi-Level Controls §130.1(b)	Shut-Off Controls §130.1(c)	Primary/Skylit Daylighting §130.1(d)	Secondary Daylighting §140.6(d)	Interlocked Systems §140.6(a)1	Field Inspector: Pass	Fail
Electrical, Mechanical, Telephone Room	Electrical Mechancial Telephone Room	Manual ON/OFF	Dimmer	Exempt*	N/A	N/A	No	☐	☐

*NOTES: Controls with a * require a note in the space below explaining how compliance is achieved.
EX: Conference 1: Primary/Skylight Daylighting: Exempt because less than 120 watts of general lighting; EXCEPTION 1 to §130.1(d)2

Electrical, Mechanical, Telephone Room	130.1(c) Ex 4	13	
		Plan Sheet Showing Daylit Zones:	
		E3.0	

I. LIGHTING POWER ALLOWANCE: COMPLETE BUILDING OR AREA CATEGORY METHODS
Each area complying using the Complete Building or Area Category Methods per §140.6(b) are included in this table. Column 06 indicates if additional lighting power allowances per §140.6(c) or adjustments per §140.6(a) are being used .

Conditioned Spaces

01	02	03	04	05	06	
Area Description	Complete Building or Area Category Primary Function Area	Allowed Density (W/ft^2)	Area (ft^2)	Allowed Wattage (Watts)	Additional Allowance / Adjustment: Area Category	PAF

STATE OF CALIFORNIA
Indoor Lighting
NRCC-LTI-E — CALIFORNIA ENERGY COMMISSION

CERTIFICATE OF COMPLIANCE			NRCC-LTI-E
Project Name:	Pine Mountain Communications Vault	**Report Page:**	**(Page 4 of 7)**
Project Address:	Pine Mountain Road	**Date Prepared:**	4/26/2024

I. LIGHTING POWER ALLOWANCE: COMPLETE BUILDING OR AREA CATEGORY METHODS

Communications Vault	Electrical Mechancial Telephone Room	0.4	226	90.4	Yes	No
		TOTALS:	226	90.4	See Tables J, or P for detail	

J. ADDITIONAL ALLOWANCE: AREA CATEGORY METHOD QUALIFYING LIGHTING SYSTEM
All areas indicated in Table I as using an additional allowance using the Area Category Method have been included in this table to calculate the additional allowance per Table 140.6-C

Conditioned Spaces

01	02	03	04	05	06	07	08	09	10
Area Description	Primary Function Area	Applicable Qualifying Lighting System from Table 140.6-C	Allowed Density (W/ft^2 or W/lf or W/unit)	Ltg Area, Length or ATM/Mirror (ft^2, lf or #)	Extra Allowance (Watts)	Luminaire Name or Item Tag	Watts per Luminaire	Number of Luminaires	Total Design Watts
Communications Vault	Electrical Mechancial Telephone Room	Detailed Task Lighting	0.20	226	45.2	F1	13	10	130
Total Design Watts	Calculated Allowance (Watts):	Total Additional Allowance for this area:							
130	45.2	45.2							
11									
Total Additional Allowance (Watts) CONDITIONED SPACES		45.2							
Unconditioned Spaces									

K. TAILORED METHOD GENERAL LIGHTING POWER ALLOWANCE
This section does not apply to this project.

L. ADDITIONAL LIGHTING ALLOWANCE: TAILORED WALL DISPLAY
This section does not apply to this project.

STATE OF CALIFORNIA
Indoor Lighting
NRCC-LTI-E — CALIFORNIA ENERGY COMMISSION

CERTIFICATE OF COMPLIANCE			NRCC-LTI-E
Project Name:	Pine Mountain Communications Vault	**Report Page:**	**(Page 5 of 7)**
Project Address:	Pine Mountain Road	**Date Prepared:**	4/26/2024

M. ADDITIONAL LIGHTING ALLOWANCE: TAILORED FLOOR AND TASK LIGHTING
This section does not apply to this project.

N. ADDITIONAL LIGHTING ALLOWANCE: TAILORED ORNAMENTAL/SPECIAL EFFECTS
This section does not apply to this project.

O. ADDITIONAL LIGHTING ALLOWANCE: TAILORED VERY VALUABLE MERCHANDISE
This section does not apply to this project.

P. POWER ADJUSTMENT: LIGHTING CONTROL CREDIT (POWER ADJUSTMENT FACTOR (PAF))
This section does not apply to this project.

Q. RATED POWER REDUCTION COMPLIANCE FOR ALTERATIONS
This section does not apply to this project.

R. 80% LIGHTING POWER FOR ALL ALTERATIONS - CONTROLS EXCEPTIONS
This section does not apply to this project.

S. DAYLIGHT DESIGN POWER ADJUSTMENT FACTOR (PAF)
This section does not apply to this project.

T. DECLARATION OF REQUIRED CERTIFICATES OF INSTALLATION
Selections have been made based on information provided in this document. If any selection have been changed by permit applicant, an explanation should be included in Table E. Additional Remarks. These documents must be provided to the building inspector during construction and can be found online at https://www.energy.ca.gov/title24/2019standards/2019_compliance_documents/Nonresidential_Documents/NRCI/

Form/Title	Field Inspector: Pass	Fail
NRCI-LTI-01-E - Must be submitted for all buildings	☐	☐

STATE OF CALIFORNIA
Indoor Lighting
NRCC-LTI-E — CALIFORNIA ENERGY COMMISSION

CERTIFICATE OF COMPLIANCE			NRCC-LTI-E
Project Name:	Pine Mountain Communications Vault	**Report Page:**	**(Page 7 of 7)**
Project Address:	Pine Mountain Road	**Date Prepared:**	4/26/2024

DOCUMENTATION AUTHOR'S DECLARATION STATEMENT
I certify that this Certificate of Compliance documentation is accurate and complete.

Documentation Author Name: Mike Johnston	Documentation Author Signature: Mike Johnston
Company: Engineering Enterprises Inc	Signature Date: 2024-04-26
Address: 613 Fourth Street Suite 206B	CEA/ HERS Certification Identification (if applicable):
City/State/Zip: Santa Rosa CA 95404	Phone: 707.544-7775

RESPONSIBLE PERSON'S DECLARATION STATEMENT
I certify the following under penalty of perjury, under the laws of the State of California:
1. The information provided on this Certificate of Compliance is true and correct.
2. I am eligible under Division 3 of the Business and Professions Code to accept responsibility for the building design or system design identified on this Certificate of Compliance (responsible designer)
3. The energy features and performance specifications, materials, components, and manufactured devices for the building design or system design identified on this Certificate of Compliance conform to the requirements of Title 24, Part 1 and Part 6 of the California Code of Regulations.
4. The building design features or system design features identified on this Certificate of Compliance are consistent with the information provided on other applicable compliance documents, worksheets, calculations, plans and specifications submitted to the enforcement agency for approval with this building permit application.
5. I will ensure that a completed signed copy of this Certificate of Compliance shall be made available with the building permit(s) issued for the building, and made available to the enforcement agency for all applicable inspections. I understand that a completed signed copy of this Certificate of Compliance is required to be included with the documentation the builder provides to the building owner at occupancy.

Responsible Designer Name: Mike Johnston	Responsible Designer Signature: Mike Johnston
Company: Engineering Enterprises Inc.	Date Signed: 2024-04-26
Address: 613 Fourth Street, Suite 206B	License: E 15586
City/State/Zip: Santa Rosa CA 95404	Phone: 707 544-7775

ARCHITECT:
AXIA ARCHITECTS
540 Mendocino Ave, Santa Rosa, CA 95404
707 542-4652
axiaarchitects.com

CONSULTANT:
Engineering Enterprises Inc.
Electrical Engineering and Designs
613 4th Street Suite 206
Santa Rosa, Ca 95404
707 544-7775
mi@engineering-enterprises.com

Sonoma County Facilities Development & Management
PINE MOUNTAIN ANTENNA COMMUNICATIONS BUILDING RECONSTRUCTION
33500 PINE MOUNTAIN RD., CLOVERDALE, CA 95425 APN: 117-240-051

SEAL:
REGISTERED PROFESSIONAL ENGINEER 06.05.24 MICHAEL JOHNSTON NO. E 15586 EXP. 12-31-25 ELECTRICAL STATE OF CALIFORNIA
Mike Johnston

SHEET LOG

REV #	DATE:	ISSUED FOR:

Date Stamped: 4/7/2025 Permit #: BLD24-4281 Plans Examiner: Ronald Morris
REVIEWED FOR CODE COMPLIANCE - PERMIT SONOMA

JOB NUMBER: 1191
SHEET:
E5.0
TITLE 24
INDOOR LIGHTING
ORIGINAL DATE: JUNE 7, 2024
© AXIA ARCHITECTS

STATE OF CALIFORNIA
Outdoor Lighting
NRCC-LTO-E — CALIFORNIA ENERGY COMMISSION

CERTIFICATE OF COMPLIANCE			NRCC-LTO-E
Project Name:	Pine Mountain Communications Vault	Report Page:	(Page 1 of 7)
Project Address:	Pine Mountain Road	Date Prepared:	4/26/2024

A. GENERAL INFORMATION

01	Project Location (city)	Cloverdale	04	Total Illuminated Hardscape Area (ft²)	1600
02	Climate Zone	2			
03	Outdoor Lighting Zone per Title 24 Part 1 §10.114 or as designated by Authority Having Jurisdiction (AHJ):				

☐ LZ-0: Very Low - Undeveloped Parkland ☐ LZ-2: Moderate - Rural Areas ☐ LZ-4: High - Must be reviewed by CA Energy Commission for Approval
☒ LZ-1: Low - Developed Parkland ☐ LZ-3: Moderately High - Urban Areas

B. PROJECT SCOPE

This table includes outdoor lighting systems that are within the scope of the permit application and are demonstrating compliance using the prescriptive path outlined in §140.7 or §141.0(b)2L for alterations.

My Project Consists of:

01	02
☒ New Lighting System	Must Comply with Allowances from §140.7
☐ Altered Lighting System	Is your alteration increasing the connected lighting load (Watts)? ○ Yes ○ No

03	04	05
% of Existing Luminaires Being Altered[1]	Sum Total of Luminaires Being Added or Altered	Calculation Method
☐ < 10% ☐ >= 10% and < 50% ☐ >= 50%		

Please proceed to Table F. Outdoor Lighting Fixture Schedule to define the project's luminaires.

[1] *FOOTNOTES: % of Existing Luminaires Being Altered = (Sum Total of Luminaires Being Added or Altered / Existing Luminaires within the Scope of the Permit Application) x 100.*

STATE OF CALIFORNIA
Outdoor Lighting
NRCC-LTO-E — CALIFORNIA ENERGY COMMISSION

CERTIFICATE OF COMPLIANCE			NRCC-LTO-E
Project Name:	Pine Mountain Communications Vault	Report Page:	(Page 2 of 7)
Project Address:	Pine Mountain Road	Date Prepared:	4/26/2024

C. COMPLIANCE RESULTS

Results in this table are automatically calculated from data input and calculations in Tables F through I. Note: If any cell on this table says "COMPLIES with Exceptional Conditions" refer to Table D. Exceptional Conditions for guidance or see applicable Table referenced below.

Calculations of Total Allowed Lighting Power (Watts) §140.7 or §141.0(b)2L											Compliance Results		
01		02		03		04		05		06		07	08	09
General Hardscape Allowance §140.7(d)1 (See Table I)	+	Per Application §140.7(d)2 (See Table J)	+	Sales Frontage §140.7(d)2 (See Table K)	+	Ornamental §140.7(d)2 (See Table L)	+	Per Specific Area §140.7(d)2 (See Table M)	OR	Existing Power Allowance §141.0(b)2L (See Table N)	=	**Total Allowed** (Watts)	≥ **Total Actual** (Watts)	**07 must be >= 08**
288.5	+	---	+	---	+	---	+	---	OR	---	=	288.8	≥ 144	COMPLIES
Cutoff Compliance (See Table G for Details)														N/A
Controls Compliance (See Table H for Details)														COMPLIES

D. EXCEPTIONAL CONDITIONS

This table is auto-filled with uneditable comments because of selections made or data entered in tables throughout the form.

E. ADDITIONAL REMARKS

This table includes remarks made by the permit applicant to the Authority Having Jurisdiction.

R

STATE OF CALIFORNIA
Outdoor Lighting
NRCC-LTO-E — CALIFORNIA ENERGY COMMISSION

CERTIFICATE OF COMPLIANCE			NRCC-LTO-E
Project Name:	Pine Mountain Communications Vault	Report Page:	(Page 3 of 7)
Project Address:	Pine Mountain Road	Date Prepared:	4/26/24

F. OUTDOOR LIGHTING FIXTURE SCHEDULE

For new or altered lighting systems demonstrating compliance with §140.7 all new luminaires being installed and any existing luminaires remaining or being moved within the spaces covered by the permit application are included in the Table below. For altered lighting systems using the Existing Power method per §141.0(b)2L only new luminaires being installed and replacement luminaires being installed as part of the project scope are included (ie, existing luminaires remaining or existing luminaires being moved are not included).

Designed Wattage:

01	02		03	04	05	06	07	08	09	10	
Name or Item Tag	Complete Luminaire Description		Watts per luminaire[1, 2]	How is Wattage determined	Total number luminaires[3]	Luminaire Status[3]	Excluded per §140.7(a)	Design Watts	Cutoff Req. > 6,200 initial lumen output §130.2(b)[4]	Field Inspector	
										Pass	Fail
F2	Surface 36w LED	☐ Linear	36	Mfr. Spec	4	New	☐	144	NA: < 6200 lumens	☐	☐
							Total Design Watts:	144			

* NOTES: Selections with a * require a note in the space below explaining how compliance is achieved.
EX: Luminaire is lighting a statue; EXCEPTION 2 to §130.2(b)

[1] *FOOTNOTES: Authority Having Jurisdiction may ask for Luminaire cut sheets to confirm wattage used for compliance per §130.0(c)*
[2] *For linear luminaires, wattage should be indicated as W/lf instead of Watts/luminaire. Total linear feet should be included in column 05 instead of number of luminaires.*
[3] *Select "New" for new luminaires in a new outdoor lighting project, or for added luminaires in an alteration. Select "Altered" for replacement luminaires in an alteration. Select "Existing to Remain" for existing luminaires within the project scope that are not being altered and are remaining. Select "Existing Reinstalled" for existing luminaires which are being removed and reinstalled as part of the project scope.*
[4] *Compliance with mandatory cutoff requirements is required for luminaires with initial lumen output >= 6,200 unless exempted by §130.2(b)*

G. CUTOFF REQUIREMENTS (BUG)

This section does not apply to this project.

STATE OF CALIFORNIA
Outdoor Lighting
NRCC-LTO-E — CALIFORNIA ENERGY COMMISSION

CERTIFICATE OF COMPLIANCE			NRCC-LTO-E
Project Name:	Pine Mountain Communications Vault	Report Page:	(Page 4 of 7)
Project Address:	Pine Mountain Road	Date Prepared:	4/24/2024

H. OUTDOOR LIGHTING CONTROLS

This table demonstrates compliance with controls requirements for all new or altered luminaires installed as part of the permit application. For alteration projects, luminaires which are existing to remain (ie untouched) and luminaires which are removed and reinstalled (wiring only) do not need to be included in this table even if they are within the spaces covered by the permit application.
*When an option having a * is selected, the notes section of this table must be completed. The lighting controls section of the Compliance Summary Table on the first page will show "DOES NOT COMPLY" if the notes are left blank.*

Mandatory Controls

01	02	03	04	05	
Area Description	Shut-Off §130.2(c)1	Auto-Schedule §130.2(c)2	Motion Sensor §130.2(c)3	Field Inspector	
				Pass	Fail
Main Entrance	Photocontrol	Yes	Yes	☐	☐
Pedestrian Hardscape	Photocontrol	Yes	Yes	☐	☐

* *NOTES: Controls with a * require a note in the space below explaining how compliance is achieved.*
EX: Not permitted by health & safety to be turned off; EXCEPTION 1 to §130.2(c)

STATE OF CALIFORNIA
Outdoor Lighting
NRCC-LTO-E — CALIFORNIA ENERGY COMMISSION

CERTIFICATE OF COMPLIANCE			NRCC-LTO-E
Project Name:	Pine Mountain Communications Vault	Report Page:	(Page 5 of 7)
Project Address:	Pine Mountain Road	Date Prepared:	4/26/24

I. LIGHTING POWER ALLOWANCE (per §140.7)

This table includes areas using allowance calculations per §140.7. General Hardscape Allowance is per Table 140.7-A while "Use it or lose it" Allowances are per Table 140.7-B . Indicate which allowances are being used to expand sections for user input. Luminaires that qualify for one of the "Use it or lose it" allowances shall not qualify for another "Use it or lose it" allowance.

	01			
☒ General Hardscape Allowance Table I (below)	"Use it or lose it" Allowance (select all that apply) (select all that apply)			
	☐ Per Application Table J	☐ Sales Frontage Table K	☐ Ornamental Table L	☐ Per Specific Area Table M

Calculated General Hardscape Lighting Power Allowance per Table 140.7-A (LZ 0, 1 & 4)

02	03	04	05	06	07	08	9
	Area Wattage Allowance (AWA)						
	Illuminated Area (ft²)	Allowed Density (W/ft²)	Area Allowance (Watts)	Perimeter Length (lf)	Allowed Density (W/lf)	Linear Allowance (Watts)	
Pedestrian Hardscape	1600	0.021	25.6	64.5	0.2	12.9	38.5
Initial Wattage Allowance for Entire Site (Watts):							
Total General Hardscape Allowance (Watts):							38.5

Calculated General Hardscape Lighting Power Allowance per Table 140.7-A (LZ 3)

J. LIGHTING ALLOWANCE: PER APPLICATION

This section does not apply to this project.

K. LIGHTING ALLOWANCE: SALES FRONTAGE

This section does not apply to this project.

L. LIGHTING ALLOWANCE: ORNAMENTAL

This section does not apply to this project.

M. LIGHTING ALLOWANCE: PER SPECIFIC AREA

This section does not apply to this project.

STATE OF CALIFORNIA
Outdoor Lighting
NRCC-LTO-E — CALIFORNIA ENERGY COMMISSION

CERTIFICATE OF COMPLIANCE			NRCC-LTO-E
Project Name:	Pine Mountain Communications Vault	Report Page:	(Page 6 of 7)
Project Address:	Pine Mountain Road	Date Prepared:	4/26/2024

N. EXISTING CONDITIONS POWER ALLOWANCE (alterations only)

This section does not apply to this project.

O. DECLARATION OF REQUIRED CERTIFICATES OF INSTALLATION

Selections have been made based on information provided in this document. If any selection have been changed by permit applicant, an explanation should be included in Table E. Additional Remarks. These documents must be provided to the building inspector during construction and can be found online at https://www.energy.ca.gov/title24/2019standards/2019_compliance_documents/Nonresidential_Documents/NRCI/

Form/Title	Field Inspector	
	Pass	Fail
NRCI-LTO-01-E - Must be submitted for all buildings	☐	☐
NRCI-LTO-02-E- Must be submitted for a lighting control system, or for an Energy Management Control System (EMCS), to be recognized for compliance.	☐	☐

P. DECLARATION OF REQUIRED CERTIFICATES OF ACCEPTANCE

Selections have been made based on information provided in this document. If any selection have been changed by permit applicant, an explanation should be included in Table E. Additional Remarks. These documents must be provided to the building inspector during construction and must be completed through an Acceptance Test Technician Certification Provider (ATTCP). For more information visit: http://www.energy.ca.gov/title24/attcp/providers.html

Form/Title	Systems/Spaces To Be Field Verified	Field Inspector	
		Pass	Fail
NRCA-LTO-02-A - Must be submitted for all outdoor lighting controls except for alterations where controls are added to <= 20 luminaires.	☐	☐	

STATE OF CALIFORNIA
Outdoor Lighting
NRCC-LTO-E — CALIFORNIA ENERGY COMMISSION

CERTIFICATE OF COMPLIANCE			NRCC-LTO-E
Project Name:	Pine Mountain Communications Vault	Report Page:	(Page 7 of 7)
Project Address:	Pine Mountain Road	Date Prepared:	4/26/2024

DOCUMENTATION AUTHOR'S DECLARATION STATEMENT

I certify that this Certificate of Compliance documentation is accurate and complete.

Documentation Author Name: Mike Johnston	Documentation Author Signature: Mike Johnston
Company: Engineering Enterprises Inc	Signature Date: 2024-04-26
Address: 613 Fourth Street Suite 206B	CEA/ HERS Certification Identification (if applicable):
City/State/Zip: Santa Rosa CA 95404	Phone: 707.544-7775

RESPONSIBLE PERSON'S DECLARATION STATEMENT

I certify the following under penalty of perjury, under the laws of the State of California:

1. The information provided on this Certificate of Compliance is true and correct.
2. I am eligible under Division 3 of the Business and Professions Code to accept responsibility for the building design or system design identified on this Certificate of Compliance (responsible designer)
3. The energy features and performance specifications, materials, components, and manufactured devices for the building design or system design identified on this Certificate of Compliance conform to the requirements of Title 24, Part 1 and Part 6 of the California Code of Regulations.
4. The building design features or system design features identified on this Certificate of Compliance are consistent with the information provided on other applicable compliance documents, worksheets, calculations, plans and specifications submitted to the enforcement agency for approval with this building permit application.
5. I will ensure that a completed signed copy of this Certificate of Compliance shall be made available with the building permit(s) issued for the building, and made available to the enforcement agency for all applicable inspections. I understand that a completed signed copy of this Certificate of Compliance is required to be included with the documentation the builder provides to the building owner at occupancy.

Responsible Designer Name: Mike Johnston	Responsible Designer Signature: Mike Johnston
Company: Engineering Enterprises Inc	Date Signed: 2024-04-26
Address: 613 Fourth Street, Suite 206B	E 15586
City/State/Zip: Santa Rosa CA 95404	Phone: 707 544-7775

ARCHITECT:
AXIA ARCHITECTS
540 Mendocino Ave, Santa Rosa, CA
707-542-4652
axiaarchitects.com

CONSULTANT:
Engineering Enterprises Inc.
Electrical Engineering and Designs
613 4th Street Suite 206
Santa Rosa, Ca 95404
707.544-7775
mi.e engineering-enterprises.com

Sonoma County Facilities Development & Management
PINE MOUNTAIN ANTENNA COMMUNICATIONS BUILDING RECONSTRUCTION
33550 PINE MOUNTAIN RD., CLOVERDALE, CA 95425 APN: 117-240-051

SEAL:
REGISTERED PROFESSIONAL ENGINEER 06.05.24 MICHAEL JOHNSTON NO. E 15586 EXP. 12-31-25 ELECTRICAL STATE OF CALIFORNIA
Mike Johnston

Date Stamped: 4/7/2025 Permit #: BLD24-4021 Plans Examiner: Ronald Morris
REVIEWED FOR CODE COMPLIANCE - PERMIT SONOMA

SHEET LOG

REV #	DATE:	ISSUED FOR:

JOB NUMBER: 1191
SHEET:
E6.0
TITLE 24
OUTDOOR LIGHTING

ORIGINAL DATE: JUNE 7, 2024
© AXIA ARCHITECTS