COUNTY OF SONOMA
DEPARTMENT OF TRANSPORTATION AND PUBLIC WORKS

PROJECT PLANS FOR CONSTRUCTION OF

GEYSERS ROAD BRIDGE

OVER FRASIER CREEK
8.2 MILES EAST OF CLOVERDALE

(COUNTY ROAD NO. 0901A)

INDEX OF SHEETS

SHEET No.	SHEET ID	DESCRIPTION
1	T-1	TITLE
2	X-1	TYPICAL CROSS SECTIONS
3	PC-1	PROJECT CONTROL
4	L-1	LAYOUT
5	PS-1	PROFILE AND SUPERELEVATION DIAGRAM
6	C-1	CONSTRUCTION DETAILS
7	WPC-1	TEMPORARY WATER POLLUTION CONTROL PLAN
8	G-1	CONTOUR GRADING
9	D-1	DRAINAGE PLAN
10	DP-1	DRAINAGE PROFILES
11	DD-1	DRAINAGE DETAILS
12-15	SC-1 TO SC-4	STAGE CONSTRUCTION AND TRAFFIC HANDLING
16	SCD-1	STAGE CONSTRUCTION DETAILS
17	PD-1	PAVEMENT DELINEATION AND SIGN PLAN
18	PL-1	PLANT LEGEND
19	PP-1	PLANTING PLAN
20	PLD-1	PLANTING DETAILS
21	ECL-1	EROSION CONTROL LEGEND
22	EC-1	EROSION CONTROL PLAN

STRUCTURES

23-41	B-1 TO B-19	GEYSERS ROAD BRIDGE (Br No. 20C0600)

GENERAL NOTES:

1. TO BE SUPPLEMENTED BY CALTRANS STANDARD PLANS 2023.
2. THE STANDARD PLANS LIST FOR THIS PROJECT IS INCLUDED IN THE SPECIAL PROVISIONS.
3. SEE STANDARD PLANS A3A, A3B AND A3C FOR ABBREVIATIONS.

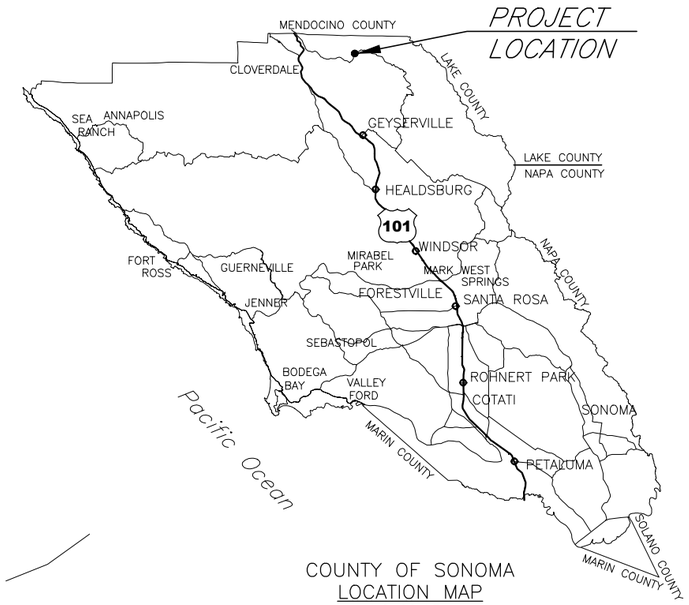

COUNTY OF SONOMA
LOCATION MAP
NO SCALE

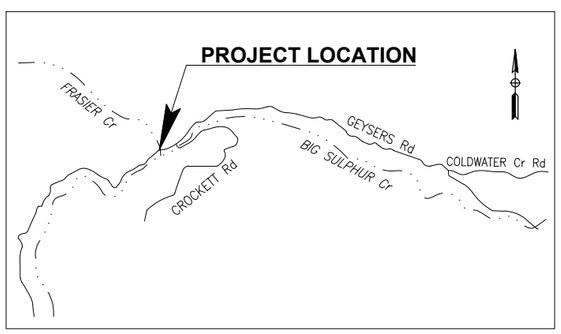

VICINITY MAP
NO SCALE

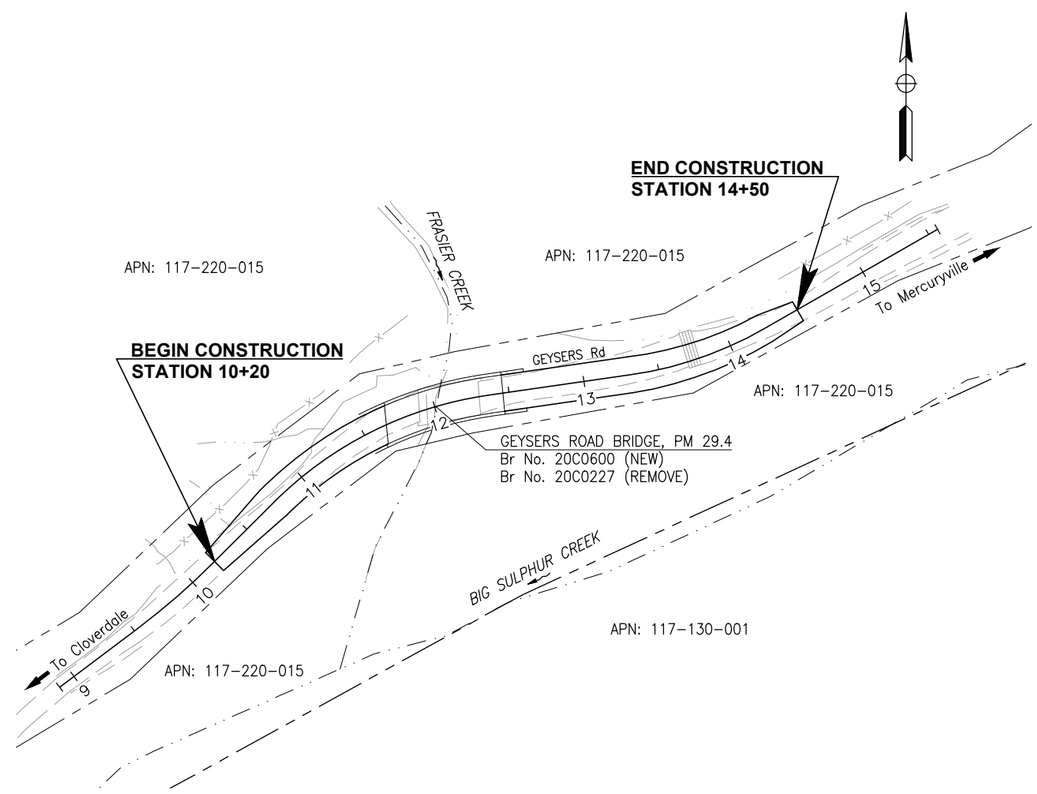

PROJECT SITE
NO SCALE

APPROVED FOR CONSTRUCTION BY:

JOHANNES J. HOEVERTSZ, P.E. 67468 — DIRECTOR — DATE 3-17-25
DEPARTMENT OF TRANSPORTATION & PUBLIC WORKS

CHET JAMSOCHIAN, P.E. 89081 — ENGINEER — DATE 1/25/2025
DEPARTMENT OF TRANSPORTATION & PUBLIC WORKS

MARK IMBRIANI, P.E. 36634 — DATE 01/24/2025
TRC, VICE PRESIDENT

REGISTERED PROFESSIONAL ENGINEER
MARK A. IMBRIANI
No. 36634
Exp. 06/30/2026
CIVIL
STATE OF CALIFORNIA

NOTE:
THE CONTRACTOR SHALL POSSESS CLASS A LICENSE AND HAZARDOUS SUBSTANCE REMOVAL CERTIFICATION AT THE TIME OF AWARD.

811 Know what's below. Call before you dig.

UNDERGROUND FACILITIES SHOWN WERE LOCATED BASED ON INFORMATION PROVIDED BY UTILITY COMPANIES AND BY MEASURING SURFACE FEATURES.

CONTRACTOR SHALL VERIFY ACTUAL DEPTH AND LOCATION OF ALL EXISTING UTLIITIES PRIOR TO CONSTRUCTION...CALL "UNDERGROUND SERVICE ALERT" (U.S.A), (TOLL FREE 811) PRIOR TO TRENCHING, GRADING, EXCAVATION, DRILLING, PIPE PUSHING, PLANTING TREES, DIGGING POST HOLES FOR FENCE, ETC.(U.S.A) WILL SUPPLY INFORMATION OR LOCATE AND MARK ANY UNDERGROUND FACILITIES.

TRC
10680 White Rock Rd., Suite 100
Rancho Cordova, California 95670

DESIGN BY	C. SILVA
DRAWING BY	M. BEEM
CHECKED BY	J. CONKLIN

"RECORD DRAWING" INFORMATION TO BE COMPLETED AFTER CONSTRUCTION

CONSTRUCTION COMPLETED:

RESIDENT ENGINEER
AS-BUILT DRAWINGS BY:

DATE	REVISION	BY	APPROVED

ROAD NUMBER	0901A
BUDGET NUMBER	C11005
FISCAL YEAR	2024-25
SHEET NUMBER	1
TOTAL SHEETS	41

T-1

Drawing name: \\rcordova-fp2\CAD\214336 Frasier Creek - Sonoma County\Sheets\214336_ab-01.dwg Layout Tab: T1 Jan 21,2025 - 7:52am CSilva

NOTES:

1. SUPERELEVATIONS ARE SHOWN ON THE SUPERELEVATION DIAGRAM.
2. EXACT LOCATIONS OF GUARDRAILING, GABIONS, AC DIKE, HP WIDTHS, AND PAVEMENT WIDTHS ARE SHOWN ON THE LAYOUT SHEETS.

PAVEMENT STRUCTURAL SECTION:

1 — 0.35' AC (TYPE A)
1.05' CLASS 2 AB

2 — Exist 0.25' AC (Approx DEPTH)

DESIGN DESIGNATION:

V = 25 MPH
TI = 7.5

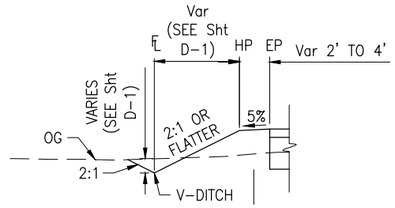

Sta 12+59.00 TO 14+50.00

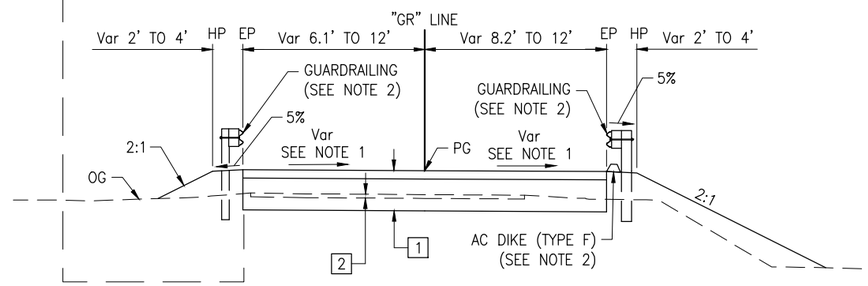

GEYSERS ROAD
Sta 12+46.00 TO 14+50.00

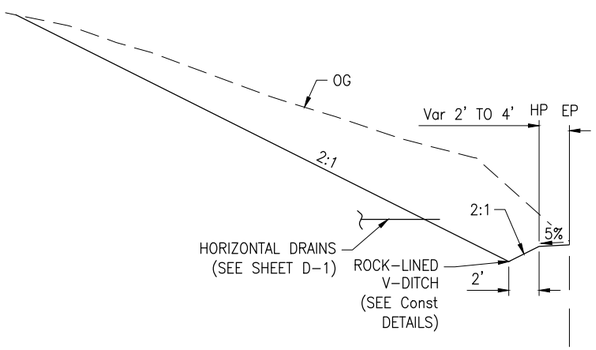

Sta 10+20.00 TO 11+57.42

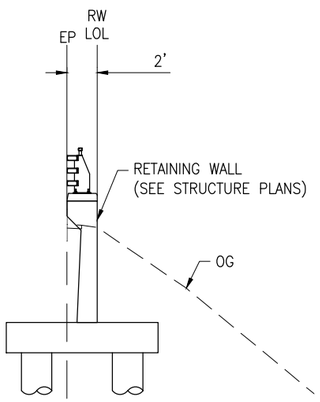

Sta 11+00.19 TO 11+60.58

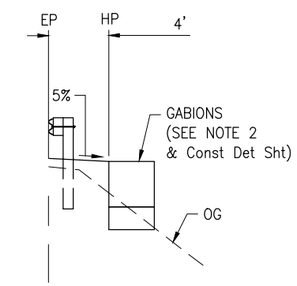

Sta 10+26.00 TO 10+46.95

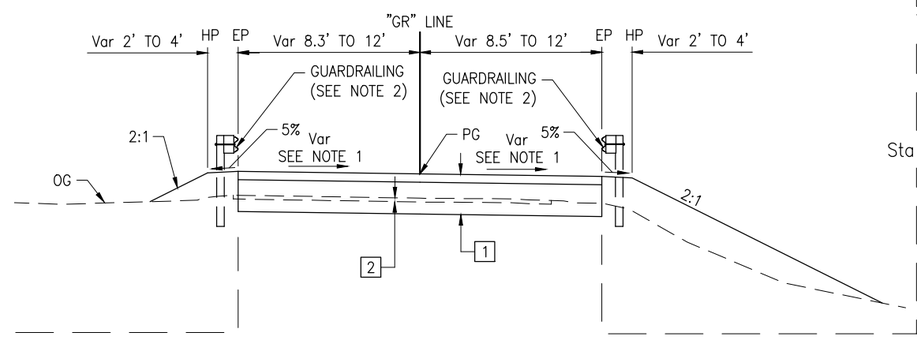

GEYSERS ROAD
Sta 10+20.00 TO 11+66.00

X-1

DESIGN BY	C. SILVA	
DRAWING BY	D. LOR	
CHECKED BY	J. CONKLIN	

Justina L. Conklin
REGISTERED CIVIL ENGINEER
JANUARY 24, 2025
PLANS APPROVAL DATE
FILENAME: 214336_CA-01.DWG

REGISTERED PROFESSIONAL ENGINEER — JUSTINA L. CONKLIN — No. 53183 — Exp. 06/30/2025 — CIVIL — STATE OF CALIFORNIA

CONSTRUCTION COMPLETED:
"AS BUILT" INFORMATION TO BE COMPLETED AFTER CONSTRUCTION
RESIDENT ENGINEER
AS-BUILT DRAWINGS BY:

DATE	REVISION	BY	APPROVED

TRC — 10680 White Rock Rd., Suite 100, Rancho Cordova, California 95670

ORIGINAL SCALE IN INCHES FOR REDUCED PLANS 0 1 2 3

COUNTY OF SONOMA
DEPARTMENT OF TRANSPORTATION & PUBLIC WORKS
JOHANNES J. HOEVERTSZ, P.E., DIRECTOR

TYPICAL CROSS SECTIONS

GEYSERS ROAD BRIDGE OVER FRASIER CREEK REPLACEMENT PROJECT

BRIDGE NUMBER	20C0600
BUDGET NUMBER	C11005
FISCAL YEAR	2024-25
SHEET NUMBER	2
TOTAL SHEETS	41

Drawing name: \\rcordva-fp2\CAD\214336 Frasier Creek - Sonoma County\Sheets\214336_ca-01.dwg Layout Tab: X1 Jan 21,2025 - 7:57am CSilva

GENERAL NOTES:

PROPERTY LINES SHOWN HEREON ARE BASED ON MONUMENTATION FOUND AND DELINEATED ON THE MAP TITLED "RECORD OF SURVEY" RECORDED IN BOOK 737 AT PAGES 11–14, SONOMA COUNTY RECORDS.

BENCHMARK:

ELEVATION = 881.14', BEING THE TOP OF A 4" DIAMETER BRASS DISK STAMPED "US DEPARTMENT OF INTERIOR, U.S. GEOLOGIC SURVEY, ELEV 879 FT ABOVE SEA LEVEL, 14–STR, 1977" LOCATED ON THE TOP MIDDLE OF THE SOUTHWESTERLY CONCRETE HEADWALL OF THE EXISTING BIG SULPHUR CREEK BRIDGE. THIS ELEVATION IS ON THE NAVD 1988 VERTICAL DATUM AS CALCULATED FROM ADJACENT CONTROL SURVEYS BY SONOMA COUNTY PUBLIC WORKS. NOTE THAT THE PUBLISHED NGVD 1929 DATUM ELEVATION FOR THIS BENCHMARK IS 878.69' PER SONOMA COUNTY WATER AGENCY; A DIFFERENCE OF 2.45 FEET, WHICH IS TYPICAL IN THIS AREA.

LEGEND:

△ SURVEY CONTROL POINT (CP)

SURVEY MONUMENT:

1. THE EXISTING SURVEY MONUMENT (CP–06) ON THE EXISTING NORTHWEST WINGWALL WILL BE REMOVED. A NEW SURVEY MONUMENT (TYPE A) WILL BE NEEDED AND LOCATION SHALL BE DETERMINED BY THE COUNTY SURVEYOR.

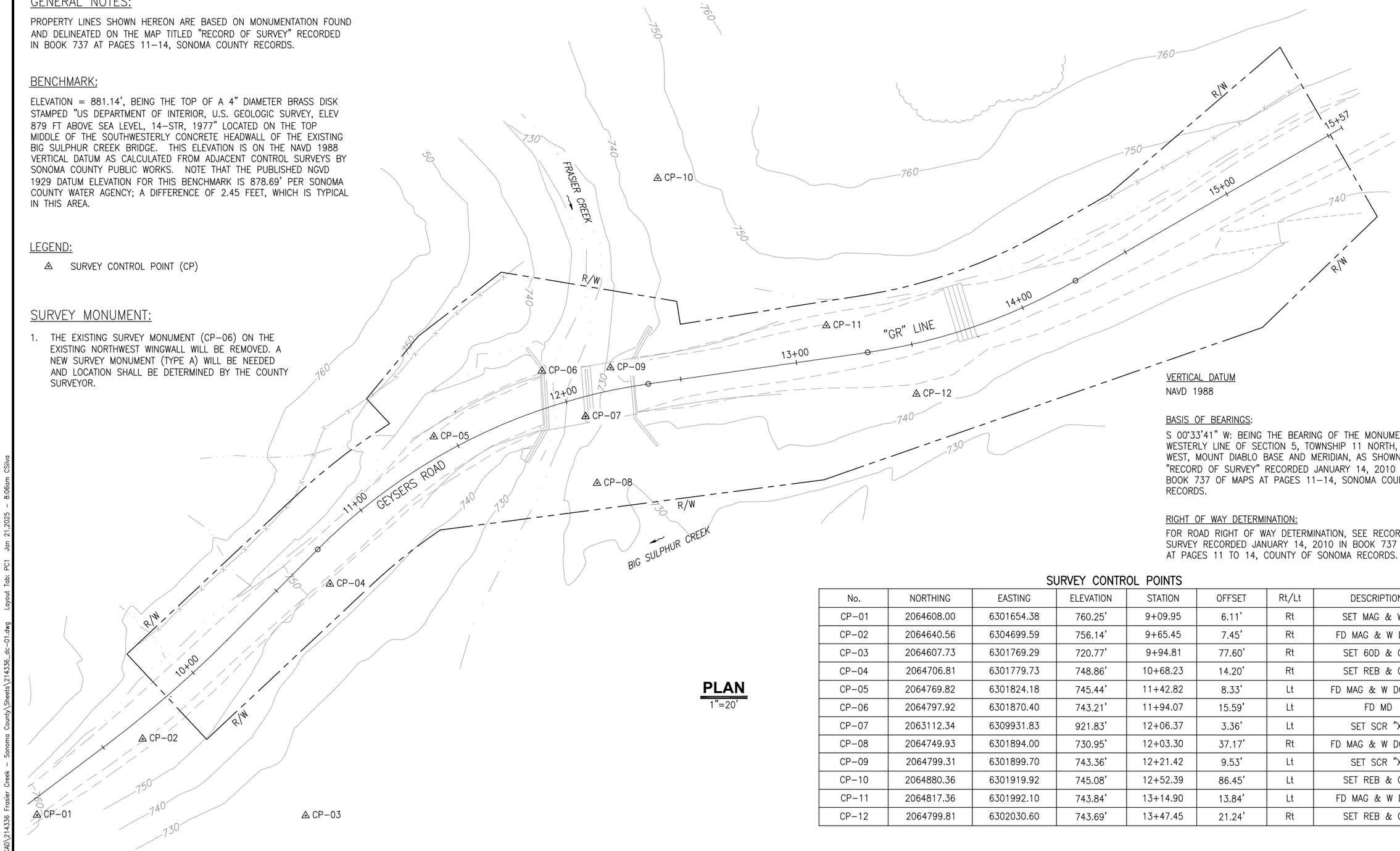

PLAN
1"=20'

VERTICAL DATUM
NAVD 1988

BASIS OF BEARINGS:
S 00°33'41" W: BEING THE BEARING OF THE MONUMENTED WESTERLY LINE OF SECTION 5, TOWNSHIP 11 NORTH, RANGE 9 WEST, MOUNT DIABLO BASE AND MERIDIAN, AS SHOWN ON THAT "RECORD OF SURVEY" RECORDED JANUARY 14, 2010 FILED IN BOOK 737 OF MAPS AT PAGES 11–14, SONOMA COUNTY RECORDS.

RIGHT OF WAY DETERMINATION:
FOR ROAD RIGHT OF WAY DETERMINATION, SEE RECORD OF SURVEY RECORDED JANUARY 14, 2010 IN BOOK 737 OF MAPS AT PAGES 11 TO 14, COUNTY OF SONOMA RECORDS.

SURVEY CONTROL POINTS

No.	NORTHING	EASTING	ELEVATION	STATION	OFFSET	Rt/Lt	DESCRIPTION
CP–01	2064608.00	6301654.38	760.25'	9+09.95	6.11'	Rt	SET MAG & WSH
CP–02	2064640.56	6304699.59	756.14'	9+65.45	7.45'	Rt	FD MAG & W DOTW
CP–03	2064607.73	6301769.29	720.77'	9+94.81	77.60'	Rt	SET 60D & CAP
CP–04	2064706.81	6301779.73	748.86'	10+68.23	14.20'	Rt	SET REB & CAP
CP–05	2064769.82	6301824.18	745.44'	11+42.82	8.33'	Lt	FD MAG & W DOTW 3
CP–06	2064797.92	6301870.40	743.21'	11+94.07	15.59'	Lt	FD MD
CP–07	2063112.34	6309931.83	921.83'	12+06.37	3.36'	Lt	SET SCR "X"
CP–08	2064749.93	6301894.00	730.95'	12+03.30	37.17'	Rt	FD MAG & W DOTW 3
CP–09	2064799.31	6301899.70	743.36'	12+21.42	9.53'	Lt	SET SCR "X"
CP–10	2064880.36	6301919.92	745.08'	12+52.39	86.45'	Lt	SET REB & CAP
CP–11	2064817.36	6301992.10	743.84'	13+14.90	13.84'	Lt	FD MAG & W DOTW
CP–12	2064799.81	6302030.60	743.69'	13+47.45	21.24'	Rt	SET REB & CAP

PC-1

DESIGN BY	C. SILVA
DRAWING BY	M. BEEM
CHECKED BY	J. CONKLIN

Justina L. Conklin
REGISTERED CIVIL ENGINEER
JANUARY 24, 2025
PLANS APPROVAL DATE
FILENAME: 214336_DC–01.DWG

REGISTERED PROFESSIONAL ENGINEER JUSTINA L. CONKLIN No. 53183 Exp. 06/30/2025 CIVIL STATE OF CALIFORNIA

CONSTRUCTION COMPLETED:
"AS BUILT" INFORMATION TO BE COMPLETED AFTER CONSTRUCTION
RESIDENT ENGINEER
AS–BUILT DRAWINGS BY:

DATE	REVISION	BY	APPROVED

TRC
10680 White Rock Rd., Suite 100
Rancho Cordova, California 95670

ORIGINAL SCALE IN INCHES FOR REDUCED PLANS 0 1 2 3

TRANSPORTATION & PUBLIC WORKS — Getting you there! — SONOMA COUNTY

COUNTY OF SONOMA
DEPARTMENT OF TRANSPORTATION & PUBLIC WORKS
JOHANNES J. HOEVERTSZ, P.E., DIRECTOR

PROJECT CONTROL

GEYSERS ROAD BRIDGE OVER FRASIER CREEK REPLACEMENT PROJECT

BRIDGE NUMBER	20C0600
BUDGET NUMBER	C11005
FISCAL YEAR	2024–25
SHEET NUMBER	3
TOTAL SHEETS	41

Drawing name: \\cordova-fp2\CAD\214336 Frasier Creek – Sonoma County\Sheets\214336_dc–01.dwg Layout Tab: PC1 Jan 21,2025 – 8:06am CSilva

NOTES:

1. FOR ROADSIDE DRAINAGE, SEE DRAINAGE PLAN, PROFILES AND DETAILS.
2. TERMINAL SYSTEMS SHALL BE CALTRANS APPROVED, TEST LEVEL 2 (TL-2).
3. EXISTING SURVEY MONUMENT TO BE REMOVED WITH REMOVAL OF EXISTING BRIDGE NORTHWEST WINGWALL (SEE CP-06 ON Sht PC-1). A NEW SURVEY MONUMENT (TYPE A) WILL BE NEEDED AND LOCATION TO BE DETERMINED BY COUNTY SURVEYOR.
4. FOR PERMANENT FENCE REMOVAL AND PLACEMENT, SEE SHEET C-1.
5. FOR TEMPORARY FENCING, SEE SHEET WPC-1.

LEGEND:

- C / F — CUT AND FILL LIMITS
- No. — REMOVE TREE
- ESA AREA
- RSP (SEE Str PLANS)
- X — TRIM TREES FOR Temp ACCESS Rd

ABBREVIATIONS:

AITS	ALTERNATIVE IN-LINE TERMINAL SYSTEM
TR	TRANSITION RAILING

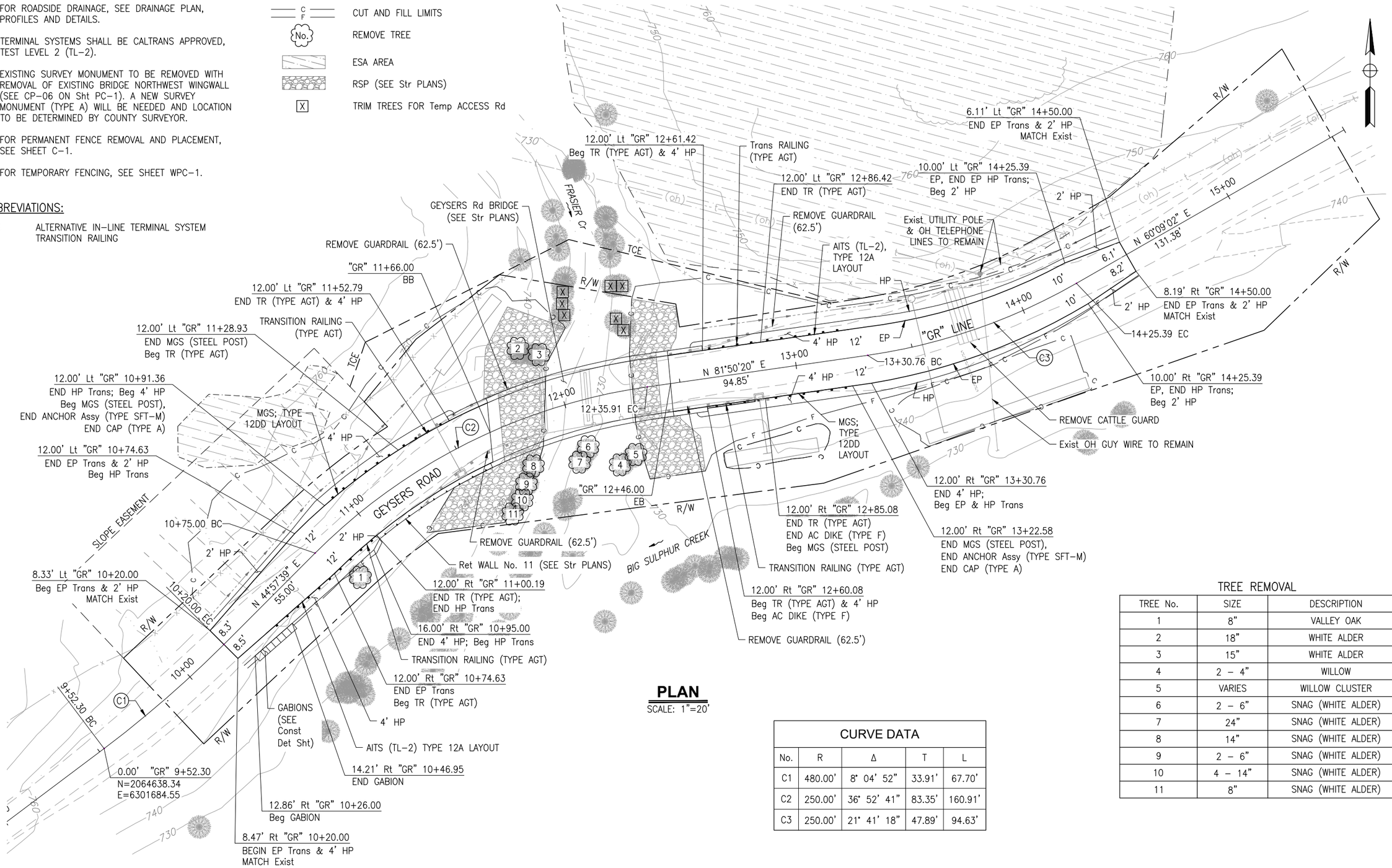

PLAN

SCALE: 1"=20'

CURVE DATA

No.	R	Δ	T	L
C1	480.00'	8° 04' 52"	33.91'	67.70'
C2	250.00'	36° 52' 41"	83.35'	160.91'
C3	250.00'	21° 41' 18"	47.89'	94.63'

TREE REMOVAL

TREE No.	SIZE	DESCRIPTION
1	8"	VALLEY OAK
2	18"	WHITE ALDER
3	15"	WHITE ALDER
4	2 – 4"	WILLOW
5	VARIES	WILLOW CLUSTER
6	2 – 6"	SNAG (WHITE ALDER)
7	24"	SNAG (WHITE ALDER)
8	14"	SNAG (WHITE ALDER)
9	2 – 6"	SNAG (WHITE ALDER)
10	4 – 14"	SNAG (WHITE ALDER)
11	8"	SNAG (WHITE ALDER)

L-1

DESIGN BY	C. SILVA
DRAWING BY	M. BEEM
CHECKED BY	J. CONKLIN

Justina L. Conklin
REGISTERED CIVIL ENGINEER
JANUARY 24, 2025
PLANS APPROVAL DATE
FILENAME: 214336_EA-01.DWG

REGISTERED PROFESSIONAL ENGINEER JUSTINA L. CONKLIN No. 53183 Exp. 06/30/2025 CIVIL STATE OF CALIFORNIA

CONSTRUCTION COMPLETED:
"AS BUILT" INFORMATION TO BE COMPLETED AFTER CONSTRUCTION
RESIDENT ENGINEER
AS-BUILT DRAWINGS BY:

DATE	REVISION	BY	APPROVED

TRC 10680 White Rock Rd., Suite 100 Rancho Cordova, California 95670

ORIGINAL SCALE IN INCHES FOR REDUCED PLANS 0 1 2 3

COUNTY OF SONOMA
DEPARTMENT OF TRANSPORTATION & PUBLIC WORKS
JOHANNES J. HOEVERTSZ, P.E., DIRECTOR

LAYOUT

GEYSERS ROAD BRIDGE OVER FRASIER CREEK REPLACEMENT PROJECT

BRIDGE NUMBER	20C0600
BUDGET NUMBER	C11005
FISCAL YEAR	2024-25
SHEET NUMBER	4
TOTAL SHEETS	41

Drawing name: \\cordova-fp2\CAD\214336 Frasier Creek – Sonoma County\Sheets\214336_ea-01.dwg Layout Tab: L1 Jan 21,2025 – 9:36am CSilva

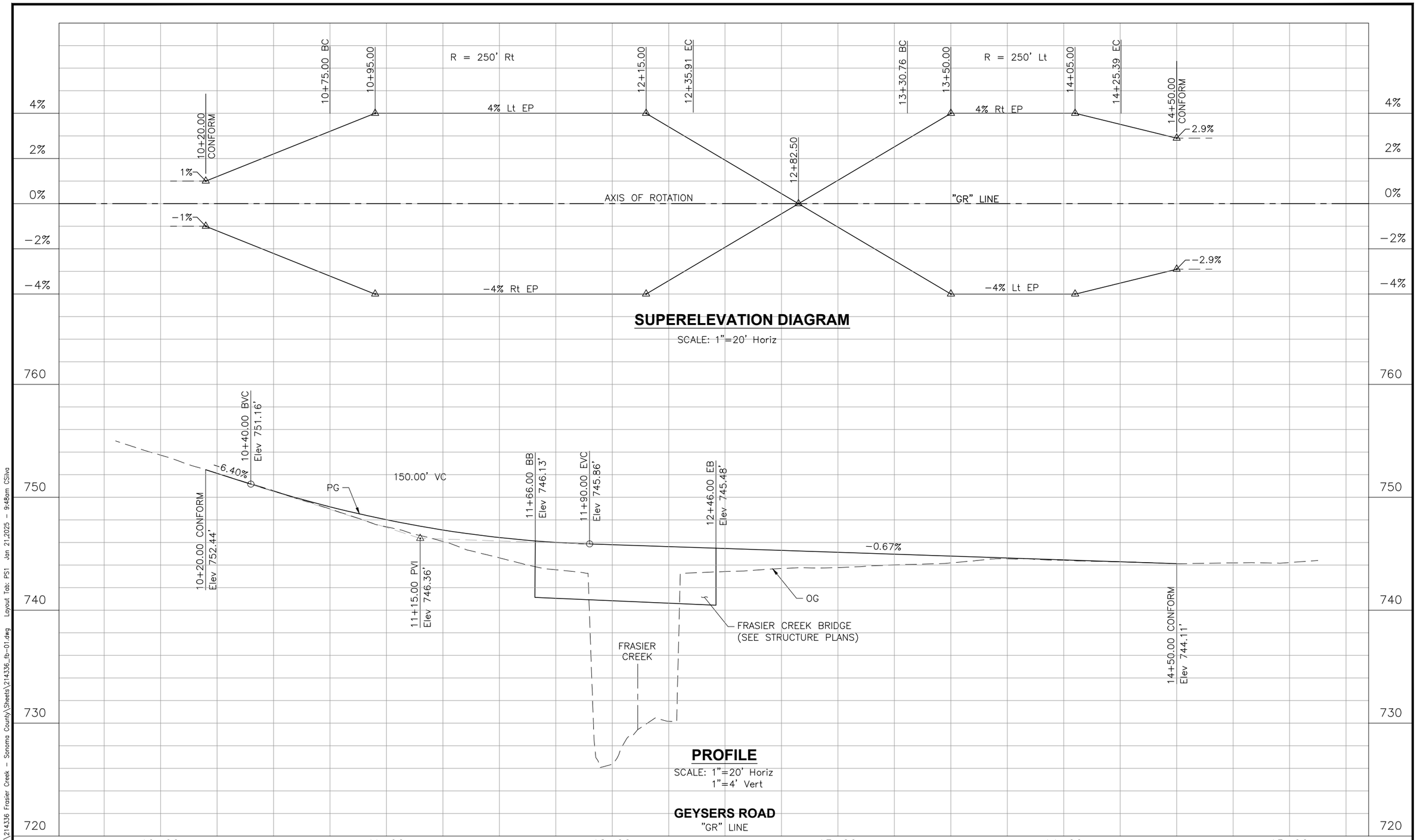

PS-1

DESIGN BY	C. SILVA	Justina L. Conklin REGISTERED CIVIL ENGINEER	REGISTERED PROFESSIONAL ENGINEER JUSTINA L. CONKLIN No. 53183 Exp. 06/30/2025 CIVIL STATE OF CALIFORNIA	CONSTRUCTION COMPLETED: "AS BUILT" INFORMATION TO BE COMPLETED AFTER CONSTRUCTION RESIDENT ENGINEER AS-BUILT DRAWINGS BY:	TRC 10680 White Rock Rd., Suite 100 Rancho Cordova, California 95670	TRANSPORTATION & PUBLIC WORKS Getting you there! SONOMA COUNTY	COUNTY OF SONOMA DEPARTMENT OF TRANSPORTATION & PUBLIC WORKS JOHANNES J. HOEVERTSZ, P.E., DIRECTOR
DRAWING BY	C. SILVA	JANUARY 24, 2025 PLANS APPROVAL DATE		DATE / REVISION / BY / APPROVED	ORIGINAL SCALE IN INCHES FOR REDUCED PLANS 0 1 2 3		
CHECKED BY	J. CONKLIN	FILENAME: 214336_FB-01.DWG					

PROFILE AND SUPERELEVATION DIAGRAM

GEYSERS ROAD BRIDGE OVER FRASIER CREEK REPLACEMENT PROJECT

BRIDGE NUMBER	20C0600
BUDGET NUMBER	C11005
FISCAL YEAR	2024–25
SHEET NUMBER	5
TOTAL SHEETS	41

Drawing name: \\cordova-fp2\CAD\214336 Frasier Creek – Sonoma County\Sheets\214336_fb-01.dwg Layout Tab: PS1 Jan 21,2025 – 9:48am CSilva

LEGEND:

ESA AREA

RSP (SEE Str PLANS)

ABBREVIATIONS:

BW TYPE BW
MP METAL POST

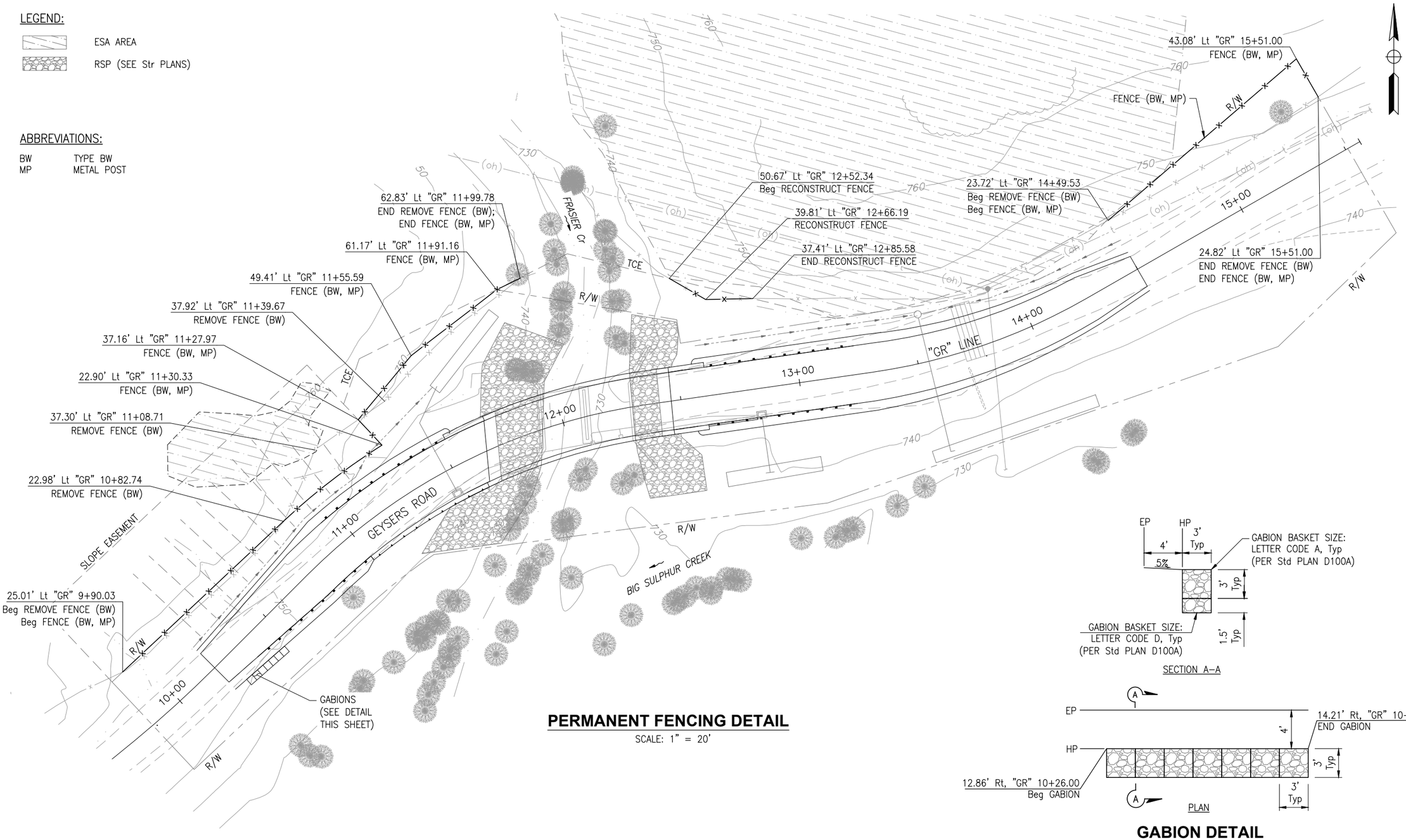

PERMANENT FENCING DETAIL

SCALE: 1" = 20'

GABION DETAIL

SCALE: 1" = 5'

C-1

DESIGN BY	C. SILVA	Justina L. Conklin REGISTERED CIVIL ENGINEER	REGISTERED PROFESSIONAL ENGINEER JUSTINA L. CONKLIN No. 53183 Exp. 06/30/2025 CIVIL STATE OF CALIFORNIA	CONSTRUCTION COMPLETED: "AS BUILT" INFORMATION TO BE COMPLETED AFTER CONSTRUCTION RESIDENT ENGINEER AS–BUILT DRAWINGS BY:	TRC 10680 White Rock Rd., Suite 100 Rancho Cordova, California 95670	COUNTY OF SONOMA DEPARTMENT OF TRANSPORTATION & PUBLIC WORKS JOHANNES J. HOEVERTSZ, P.E., DIRECTOR
DRAWING BY	D. LORENZO	JANUARY 24, 2025 PLANS APPROVAL DATE		DATE / REVISION / BY / APPROVED	ORIGINAL SCALE IN INCHES FOR REDUCED PLANS 0 1 2 3	CONSTRUCTION DETAILS GEYSERS ROAD BRIDGE OVER FRASIER CREEK REPLACEMENT PROJECT
CHECKED BY	J. CONKLIN	FILENAME: 214336_GA–01.DWG				

BRIDGE NUMBER	20C0600
BUDGET NUMBER	C11005
FISCAL YEAR	2024–25
SHEET NUMBER	6
TOTAL SHEETS	41

Drawing name: \\ccordova-fp2\CAD\214336 Frasier Creek – Sonoma County\Sheets\214336_ga-01.dwg Layout Tab: C1 Jan 21,2025 – 10:00am CSilva

LEGEND:

- TFR — TEMPORARY FIBER ROLL
- TEMPORARY DRAINAGE INLET PROTECTION
- ENVIRONMENTALLY SENSITIVE AREA

ABBREVIATIONS:

THVF	TEMPORARY HIGH–VISIBILITY FENCE
TSF	TEMPORARY SILT FENCE

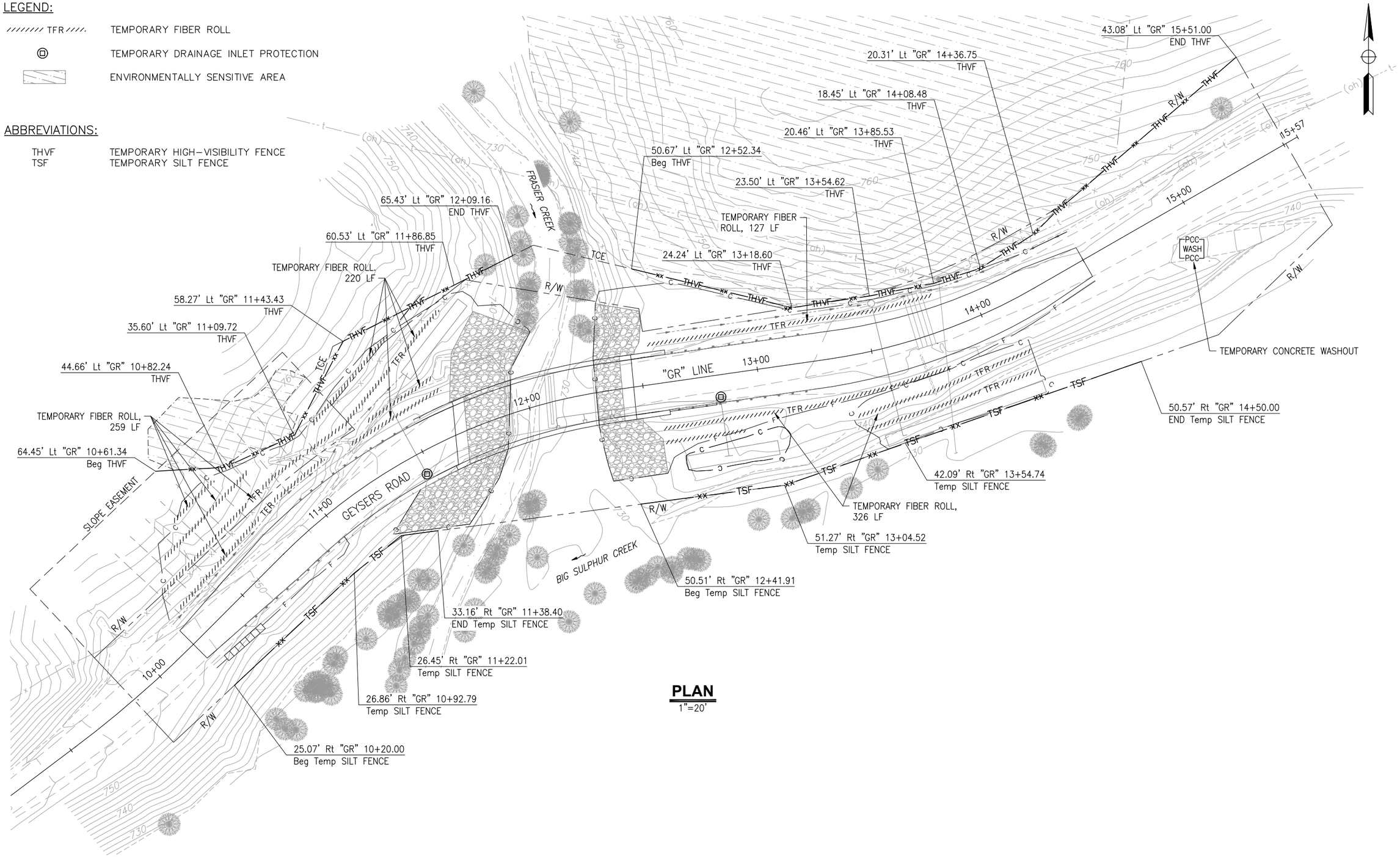

PLAN
1"=20'

WPC-1

DESIGN BY	M. BEEM	Justina L. Conklin REGISTERED CIVIL ENGINEER JANUARY 24, 2025 PLANS APPROVAL DATE FILENAME: 214336_GB-01.DWG	REGISTERED PROFESSIONAL ENGINEER JUSTINA L. CONKLIN No. 53183 Exp. 06/30/2025 CIVIL STATE OF CALIFORNIA	CONSTRUCTION COMPLETED: "AS BUILT" INFORMATION TO BE COMPLETED AFTER CONSTRUCTION RESIDENT ENGINEER AS–BUILT DRAWINGS BY: DATE / REVISION / BY / APPROVED	TRC 10680 White Rock Rd., Suite 100 Rancho Cordova, California 95670 ORIGINAL SCALE IN INCHES FOR REDUCED PLANS 0 1 2 3	COUNTY OF SONOMA DEPARTMENT OF TRANSPORTATION & PUBLIC WORKS JOHANNES J. HOEVERTSZ, P.E., DIRECTOR
DRAWING BY	M. BEEM					
CHECKED BY	J. CONKLIN					

TEMPORARY WATER POLLUTION CONTROL PLAN

GEYSERS ROAD BRIDGE OVER FRASIER CREEK REPLACEMENT PROJECT

BRIDGE NUMBER	20C0600
BUDGET NUMBER	C11005
FISCAL YEAR	2024–25
SHEET NUMBER	7
TOTAL SHEETS	41

Drawing name: \\rcordova-fp2\CAD\214336 Frasier Creek – Sonoma County\Sheets\214336_gb-01.dwg Layout Tab: WPC1 Jan 21,2025 – 10:04am CSilva

LEGEND:

ENVIRONMENTALLY SENSITIVE AREA

NOTE:

1. ALL PROPOSED SLOPES ARE 2:1, UNLESS OTHERWISE NOTED.

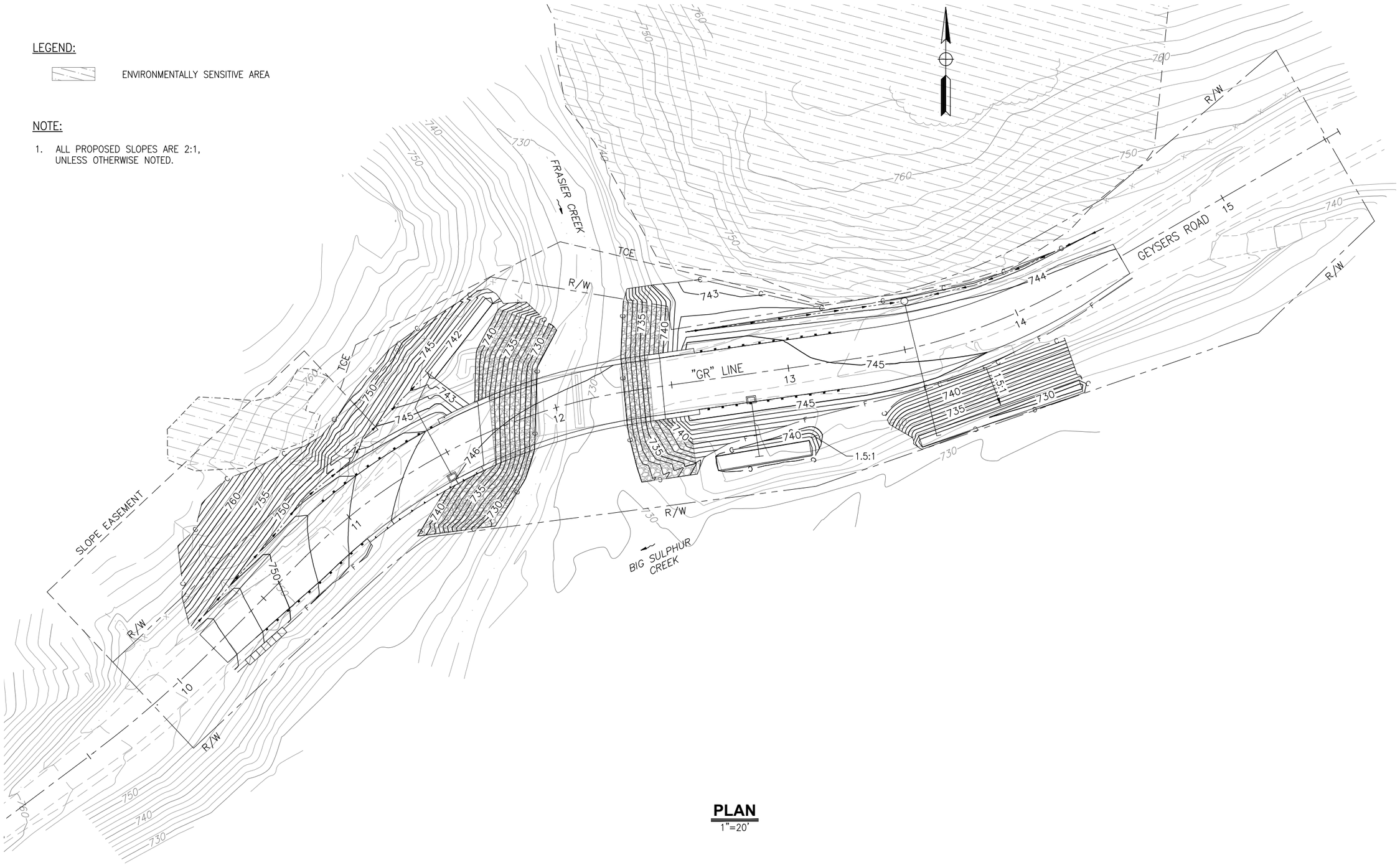

PLAN
1"=20'

APPROVED FOR CONTOUR GRADING WORK ONLY

G-1

DESIGN BY	M. BEEM
DRAWING BY	M. BEEM
CHECKED BY	C. SILVA

Justina L. Conklin
REGISTERED CIVIL ENGINEER
JANUARY 24, 2025
PLANS APPROVAL DATE

FILENAME: 214336_HA-01.DWG

REGISTERED PROFESSIONAL ENGINEER JUSTINA L. CONKLIN No. 53183 Exp. 06/30/2025 CIVIL STATE OF CALIFORNIA

CONSTRUCTION COMPLETED:
"AS BUILT" INFORMATION TO BE COMPLETED AFTER CONSTRUCTION
RESIDENT ENGINEER
AS-BUILT DRAWINGS BY:

DATE	REVISION	BY	APPROVED

TRC
10680 White Rock Rd.,
Suite 100
Rancho Cordova, California 95670

ORIGINAL SCALE IN INCHES FOR REDUCED PLANS 0 1 2 3

COUNTY OF SONOMA
DEPARTMENT OF TRANSPORTATION & PUBLIC WORKS
JOHANNES J. HOEVERTSZ, P.E., DIRECTOR

CONTOUR GRADING

GEYSERS ROAD BRIDGE OVER
FRASIER CREEK
REPLACEMENT PROJECT

BRIDGE NUMBER	20C0600
BUDGET NUMBER	C11005
FISCAL YEAR	2024-25
SHEET NUMBER	8
TOTAL SHEETS	41

Drawing name: \\rcordova-fp2\CAD\214336 Frasier Creek - Sonoma County\Sheets\214336_ha-01.dwg Layout Tab: G1 Jan 21,2025 - 10:08am CSilva

LEGEND:

- XX — DRAINAGE SYSTEM No.
- x — DRAINAGE ITEM
- V–DITCH (SEE Sht X–1)
- RSP (SEE Str PLANS)
- DIRECTION OF FLOW
- ENVIRONMENTALLY SENSITIVE AREA

ABBREVIATIONS:

RL ROCK–LINED

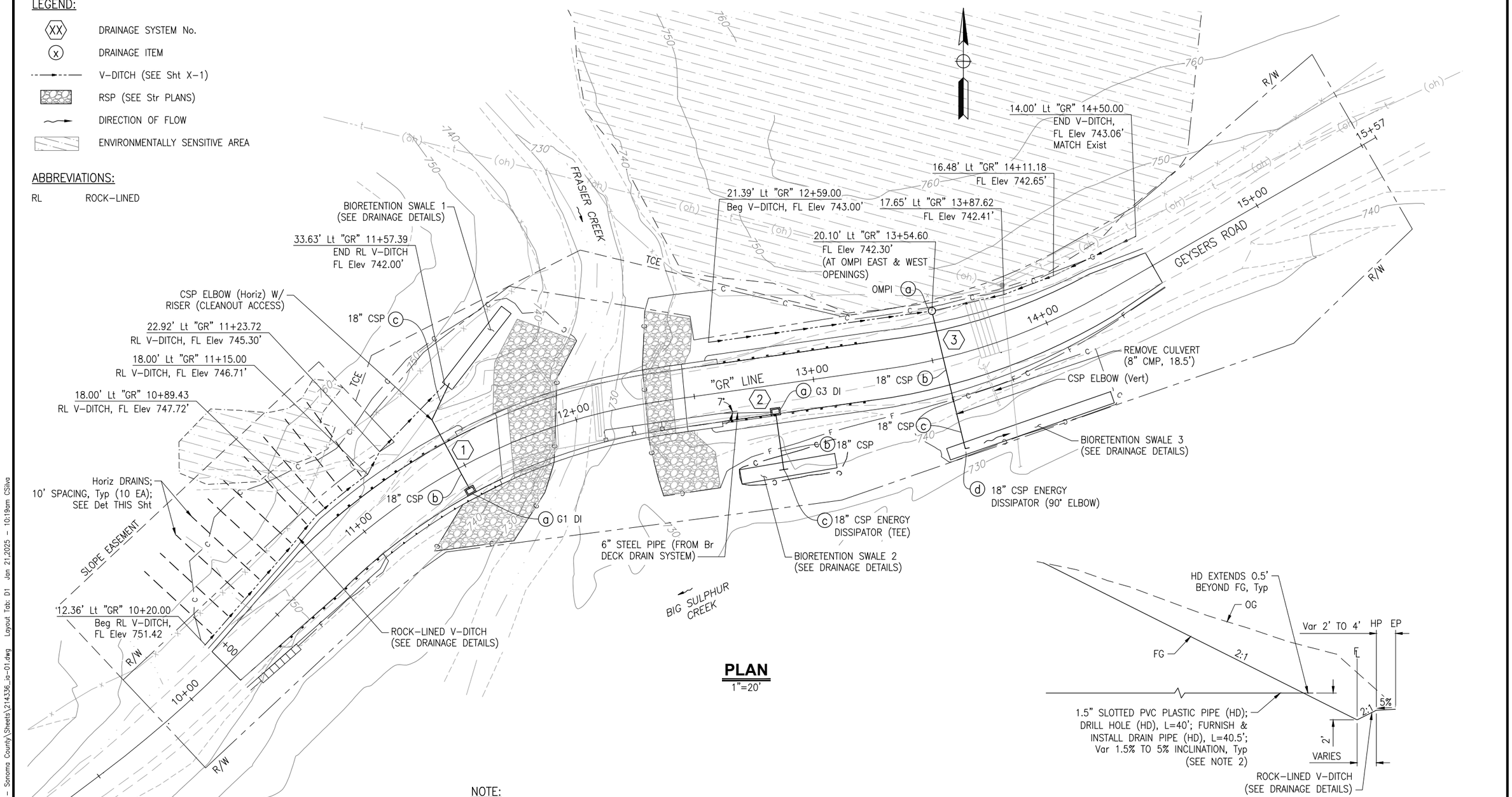

PLAN

1"=20'

HORIZONTAL DRAIN DETAIL

NO SCALE

NOTE:

1. HORIZONTAL DRAINS (HD) SHALL BE DRILLED AND INSTALLED AT LOCATIONS SHOWN ON THIS PLAN AND AS DIRECTED BY THE ENGINEER.
2. HORIZONTAL DRAIN INCLINATION MAY VARY AS NOTED TO ALLOW MINOR FLEXIBILITY DURING DRILLING OPERATIONS AND INSTALLATION.

APPROVED FOR DRAINAGE WORK ONLY

D-1

DESIGN BY	C. SILVA
DRAWING BY	D. LOR
CHECKED BY	J. CONKLIN

Justina L. Conklin
REGISTERED CIVIL ENGINEER
JANUARY 24, 2025
PLANS APPROVAL DATE
FILENAME: 214336_IA–01.DWG

REGISTERED PROFESSIONAL ENGINEER — JUSTINA L. CONKLIN — No. 53183 — Exp. 06/30/2025 — CIVIL — STATE OF CALIFORNIA

CONSTRUCTION COMPLETED:
"AS BUILT" INFORMATION TO BE COMPLETED AFTER CONSTRUCTION
RESIDENT ENGINEER
AS–BUILT DRAWINGS BY:

DATE	REVISION	BY	APPROVED

TRC — 10680 White Rock Rd., Suite 100, Rancho Cordova, California 95670

ORIGINAL SCALE IN INCHES FOR REDUCED PLANS 0 1 2 3

TRANSPORTATION & PUBLIC WORKS — Getting you there — SONOMA COUNTY

COUNTY OF SONOMA
DEPARTMENT OF TRANSPORTATION & PUBLIC WORKS
JOHANNES J. HOEVERTSZ, P.E., DIRECTOR

DRAINAGE PLAN

GEYSERS ROAD BRIDGE OVER FRASIER CREEK REPLACEMENT PROJECT

BRIDGE NUMBER	20C0600
BUDGET NUMBER	C11005
FISCAL YEAR	2024–25
SHEET NUMBER	9
TOTAL SHEETS	41

Drawing name: \\cordova-fp2\CAD\214336 Frasier Creek – Sonoma County\Sheets\214336_ia–01.dwg Layout Tab: D1 Jan 21,2025 – 10:19am CSilva

NOTES:

1. ALL STEEL GRATES SHALL BE PAID FOR AS MISCELLANEOUS IRON AND STEEL PER POUND.
2. RISER COVER PLATE MAY BE COMMERCIAL QUALITY METAL, 3/32" TO 3/16" THICK, OR AS APPROVED BY ENGINEER.
3. ATTACH RISER COVER PLATE AS SHOWN IN STANDARD PLAN D75A, DETAIL D, OR AS APPROVED BY ENGINEER.

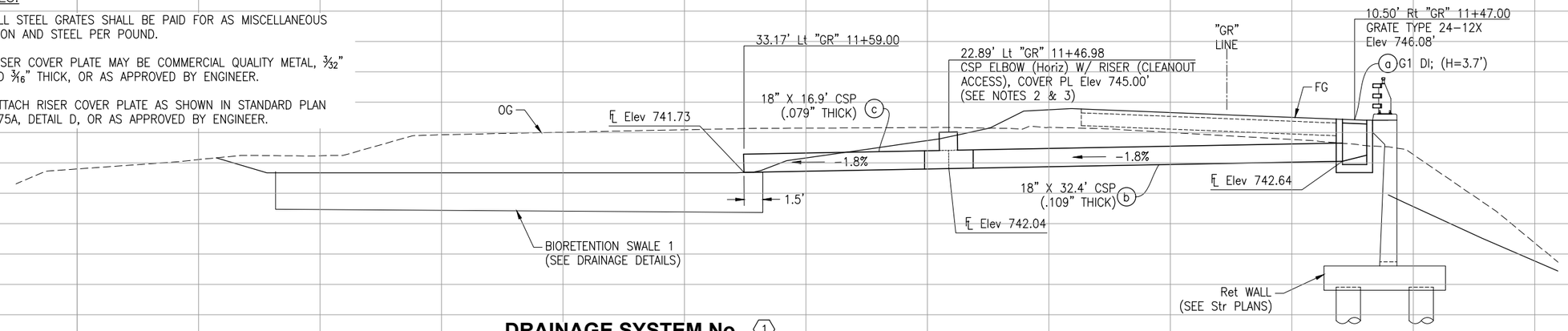

DRAINAGE SYSTEM No. 1

"GR" 11+47.00

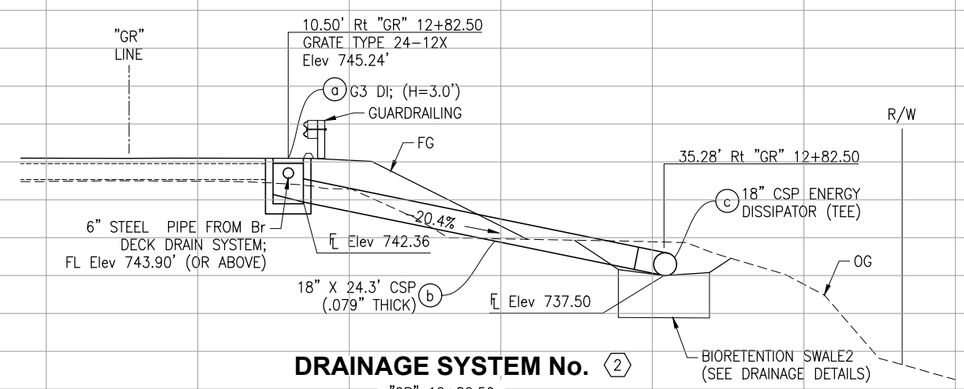

DRAINAGE SYSTEM No. 2

"GR" 12+82.50

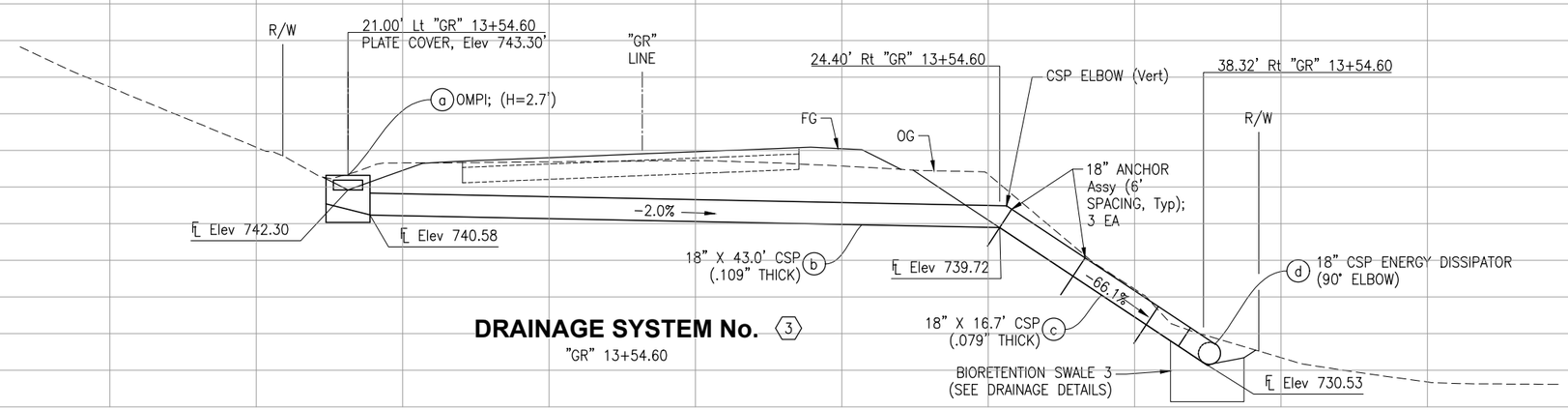

DRAINAGE SYSTEM No. 3

"GR" 13+54.60

SCALE: 1" = 5' Horiz
1" = 5' Vert

DP-1

DESIGN BY	M. BEEM	Justina L. Conklin REGISTERED CIVIL ENGINEER	REGISTERED PROFESSIONAL ENGINEER JUSTINA L. CONKLIN No. 53183 Exp. 06/30/2025 CIVIL STATE OF CALIFORNIA	CONSTRUCTION COMPLETED: "AS BUILT" INFORMATION TO BE COMPLETED AFTER CONSTRUCTION RESIDENT ENGINEER AS-BUILT DRAWINGS BY:	TRC 10680 White Rock Rd., Suite 100 Rancho Cordova, California 95670	COUNTY OF SONOMA DEPARTMENT OF TRANSPORTATION & PUBLIC WORKS JOHANNES J. HOEVERTSZ, P.E., DIRECTOR
DRAWING BY	D. LOR	JANUARY 24, 2025 PLANS APPROVAL DATE		DATE / REVISION / BY / APPROVED	ORIGINAL SCALE IN INCHES FOR REDUCED PLANS 0 1 2 3	
CHECKED BY	C. SILVA	FILENAME: 214336_IB-01.DWG				

DRAINAGE PROFILES

GEYSERS ROAD BRIDGE OVER FRASIER CREEK REPLACEMENT PROJECT

BRIDGE NUMBER	20C0600
BUDGET NUMBER	C11005
FISCAL YEAR	2024-25
SHEET NUMBER	10
TOTAL SHEETS	41

Drawing name: \\rcordova-fp2\CAD\214336 Frasier Creek - Sonoma County\Sheets\214336_ib-01.dwg Layout Tab: DP1 Jan 21,2025 - 10:31am CSilva

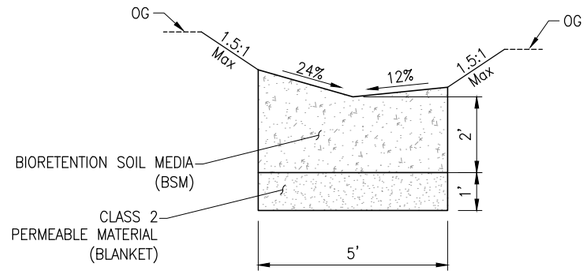

BIORETENTION SWALE 1

NO SCALE

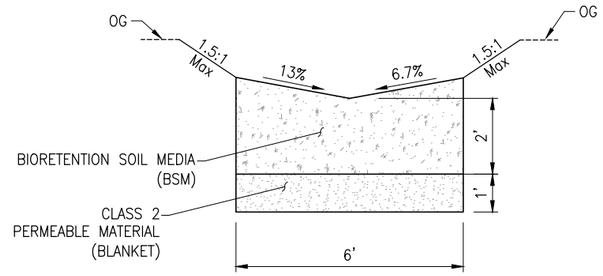

BIORETENTION SWALE 2

NO SCALE

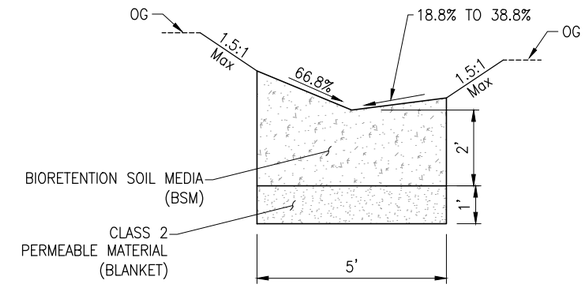

BIORETENTION SWALE 3

NO SCALE

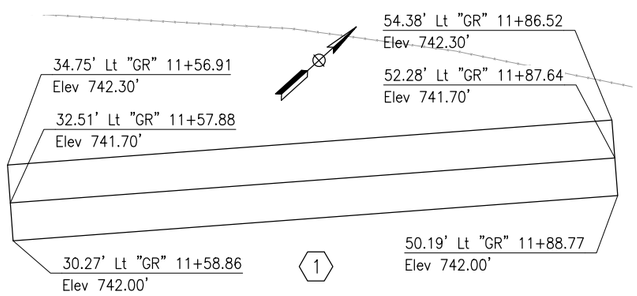

BIORETENTION SWALE 1

SCALE: 1" = 5'

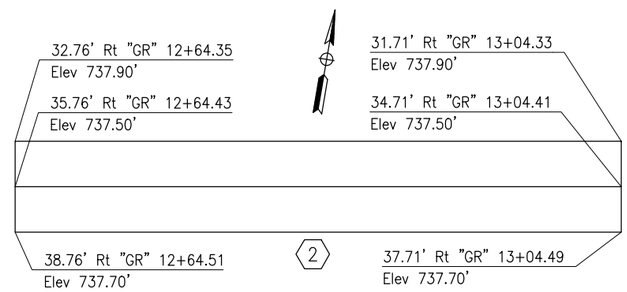

BIORETENTION SWALE 2

SCALE: 1" = 5'

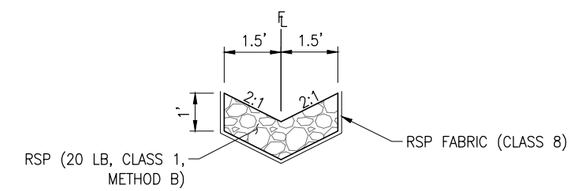

ROCK-LINED V-DITCH

Sta 10+20.00 TO 11+57.39

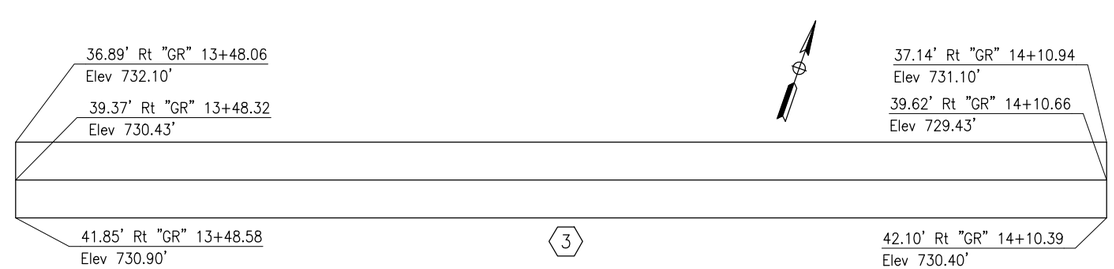

BIORETENTION SWALE 3

SCALE: 1" = 5'

NOTES: (BIORETENTION SWALE)

1. SCARIFY SUBGRADE BEFORE INSTALLING CLASS 2 PERMEABLE MATERIAL AND BIORETENTION SOIL MEDIA (BSM).
2. COMPACT EACH 6" LIFT OF BSM WITH LANDSCAPE ROLLER OR BY LIGHTLY WETTING. IF WETTING, ALLOW TO DRY OVERNIGHT BEFORE PLANTING.
3. DO NOT WORK WITHIN BIORETENTION AREA DURING RAIN OR UNDER WET CONDITIONS.
4. KEEP HEAVY MACHINERY OUTSIDE BIORETENTION AREA LIMITS.

LEGEND:

XX DRAINAGE SYSTEM No.

DD-1

DESIGN BY	M. BEEM
DRAWING BY	M. BEEM
CHECKED BY	C. SILVA

Justina L. Conklin
REGISTERED CIVIL ENGINEER
JANUARY 24, 2025
PLANS APPROVAL DATE

REGISTERED PROFESSIONAL ENGINEER JUSTINA L. CONKLIN No. 53183 Exp. 06/30/2025 CIVIL STATE OF CALIFORNIA

FILENAME: 214336_IC-01.DWG

CONSTRUCTION COMPLETED:
"AS BUILT" INFORMATION TO BE COMPLETED AFTER CONSTRUCTION
RESIDENT ENGINEER
AS-BUILT DRAWINGS BY:

DATE	REVISION	BY	APPROVED

TRC 10680 White Rock Rd., Suite 100 Rancho Cordova, California 95670

ORIGINAL SCALE IN INCHES FOR REDUCED PLANS 0 1 2 3

COUNTY OF SONOMA
DEPARTMENT OF TRANSPORTATION & PUBLIC WORKS
JOHANNES J. HOEVERTSZ, P.E., DIRECTOR

DRAINAGE DETAILS

GEYSERS ROAD BRIDGE OVER FRASIER CREEK REPLACEMENT PROJECT

BRIDGE NUMBER	20C0600
BUDGET NUMBER	C11005
FISCAL YEAR	2024-25
SHEET NUMBER	11
TOTAL SHEETS	41

Drawing name: \\rcordova-fp2\CAD\214336 Frasier Creek - Sonoma County\Sheets\214336_ic-01.dwg Layout Tab: DD1 Jan 21,2025 - 10:35am CSilva

LEGEND:

- CONSTRUCT THIS STAGE
- CONSTRUCT TEMPORARY BRIDGE
- REMOVE THIS STAGE
- DIRECTION OF TRAVEL
- TEMPORARY BARRIER SYSTEM
- TEMPORARY SIGN SINGLE POST
- PORTABLE DELINEATORS
- TEMPORARY CRASH CUSHION TL-2
- TYPE III BARRICADE
- PORTABLE SIGNAL SYSTEM
- TRIM TREES FOR Temp ACCESS Rd
- CUT/FILL LIMITS
- Temp Ret WALL
- Temp SHORING

NOTES:

1. EXACT SIGN LOCATIONS TO BE DETERMINED BY THE ENGINEER.
2. FOR TEMPORARY ROAD PROFILE, SEE SHEET SC-4.
3. TYPICAL SPACING FOR DELINEATORS SHALL BE 10' UNLESS OTHERWISE SHOWN.

STAGE 1:

1. REMOVE ALL TREES NOTED ON THE LAYOUT PLANS FROM CONSTRUCTION AREA.
2. CONSTRUCT TEMPORARY ACCESS ROAD, TEMPORARY BRIDGE, AND TEMPORARY DRAINAGE.
3. PLACE TEMPORARY BARRIER SYSTEM, TEMPORARY CRASH CUSHIONS AND TEMPORARY TRAFFIC CONTROL DEVICES.

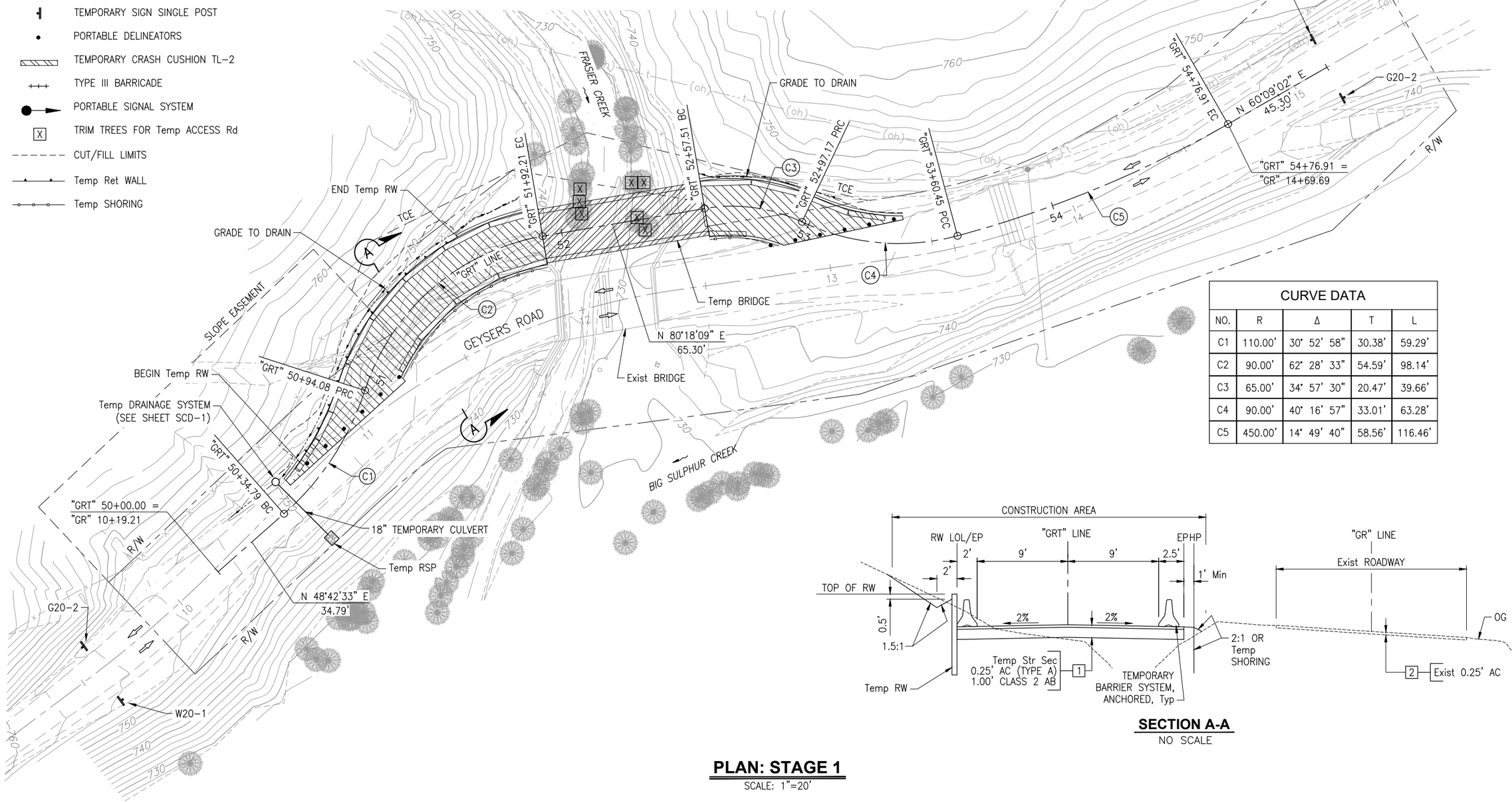

CURVE DATA				
NO.	R	Δ	T	L
C1	110.00'	30° 52' 58"	30.38'	59.29'
C2	90.00'	62° 28' 33"	54.59'	98.14'
C3	65.00'	34° 57' 30"	20.47'	39.66'
C4	90.00'	40° 16' 57"	33.01'	63.28'
C5	450.00'	14° 49' 40"	58.56'	116.46'

SECTION A-A
NO SCALE

PLAN: STAGE 1
SCALE: 1"=20'

APPROVED FOR STAGE CONSTRUCTION AND TRAFFIC HANDLING WORK ONLY

SC-1

DESIGN BY	M. BEEM
DRAWING BY	D. LOR
CHECKED BY	J. CONKLIN

REGISTERED CIVIL ENGINEER
JANUARY 24, 2025
PLANS APPROVAL DATE
FILENAME: 214336_MA-01.DWG

REGISTERED PROFESSIONAL ENGINEER JUSTINA L. CONKLIN No. 53183 Exp. 06/30/2025 CIVIL STATE OF CALIFORNIA

CONSTRUCTION COMPLETED:
"AS BUILT" INFORMATION TO BE COMPLETED AFTER CONSTRUCTION
RESIDENT ENGINEER
AS-BUILT DRAWINGS BY:

DATE	REVISION	BY	APPROVED

TRC
10680 White Rock Rd., Suite 100
Rancho Cordova, California 95670

ORIGINAL SCALE IN INCHES FOR REDUCED PLANS 0 1 2 3

COUNTY OF SONOMA
DEPARTMENT OF TRANSPORTATION & PUBLIC WORKS
JOHANNES J. HOEVERTSZ, P.E., DIRECTOR

STAGE CONSTRUCTION AND TRAFFIC HANDLING

GEYSERS ROAD BRIDGE OVER FRASIER CREEK REPLACEMENT PROJECT

BRIDGE NUMBER	20C0600
BUDGET NUMBER	C11005
FISCAL YEAR	2024-25
SHEET NUMBER	12
TOTAL SHEETS	41

Drawing name: \\rcordova-fp2\CAD\214336 Frasier Creek - Sonoma County\Sheets\214336_ma-01.dwg Layout Tab: SC1 Jan 21,2025 - 10:39am CSilva

NOTES:

1. ROADWAY MAY BE TEMPORARILY CLOSED TO CONSTRUCT ROADWAY APPROACHES TO BRIDGE.
2. ROAD MUST BE OPEN FOR TRAFFIC AT THE END OF EVERY DAY.

STAGE 2:

1. INSTALL APPROACH TRAFFIC CONTROL DEVICES AND TEMPORARY PORTABLE TRAFFIC SIGNAL SYSTEM.
2. SHIFT TRAFFIC TO TEMPORARY BRIDGE AND ACCESS ROAD WITH ONE LANE REDUCTION AT APPROACHES TO NORTH SIDE OF GEYSERS ROAD.
3. REMOVE EXISTING BRIDGE.
4. CONSTRUCT BRIDGE, PORTION OF RSP, DRAINAGE SYSTEMS, GABIONS, RETAINING WALL AND PORTION OF STRUCTURAL SECTION.

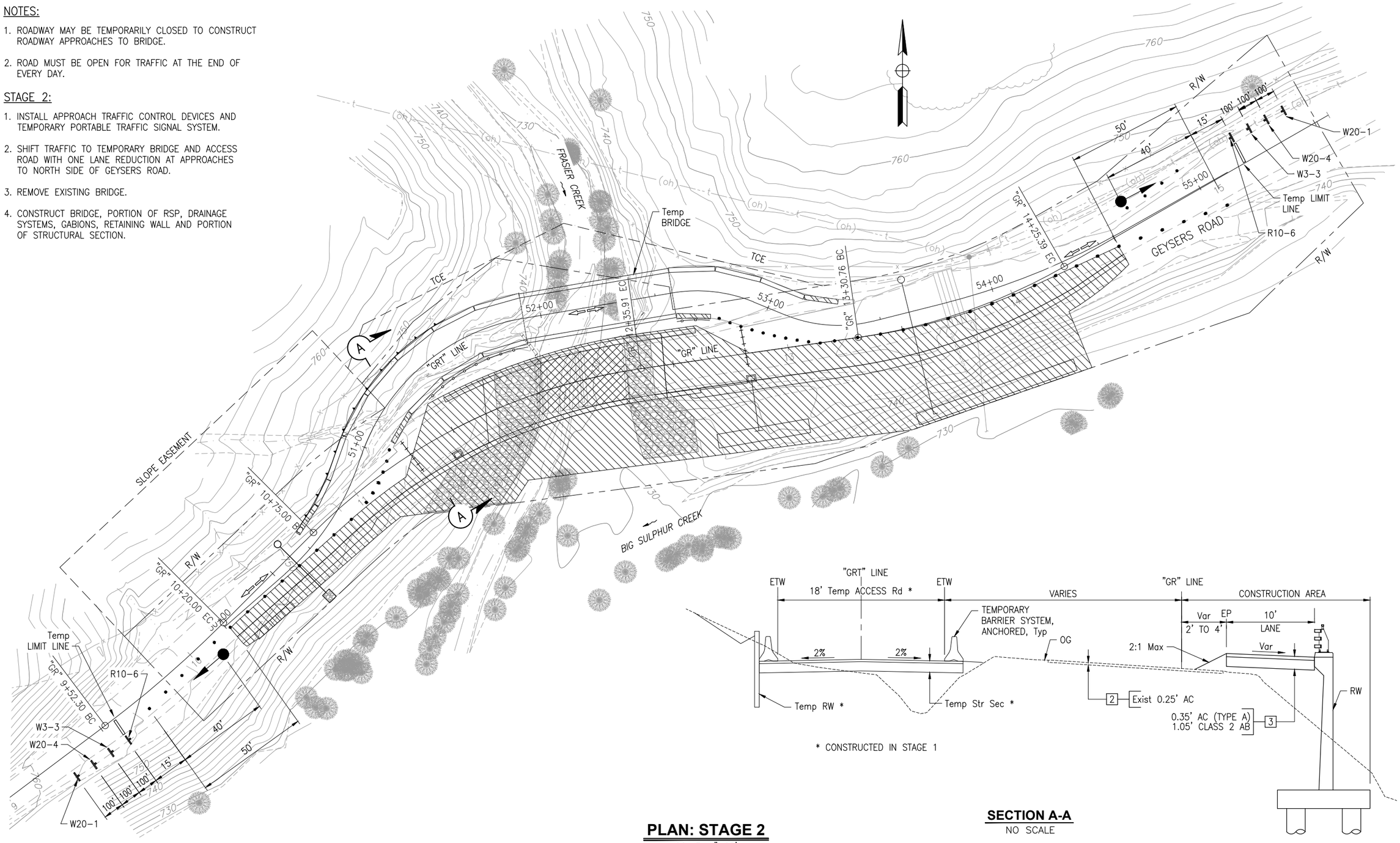

PLAN: STAGE 2

SCALE: 1"=20'

SECTION A-A

NO SCALE

APPROVED FOR STAGE CONSTRUCTION AND TRAFFIC HANDLING WORK ONLY

SC-2

DESIGN BY	M. BEEM
DRAWING BY	D. LOR
CHECKED BY	J. CONKLIN

Justina L. Conklin
REGISTERED CIVIL ENGINEER
JANUARY 24, 2025
PLANS APPROVAL DATE

REGISTERED PROFESSIONAL ENGINEER JUSTINA L. CONKLIN No. 53183 Exp. 06/30/2025 CIVIL STATE OF CALIFORNIA

FILENAME: 214336_MA-02.DWG

CONSTRUCTION COMPLETED:
"AS BUILT" INFORMATION TO BE COMPLETED AFTER CONSTRUCTION
RESIDENT ENGINEER
AS-BUILT DRAWINGS BY:

DATE	REVISION	BY	APPROVED

TRC
10680 White Rock Rd., Suite 100
Rancho Cordova, California 95670

ORIGINAL SCALE IN INCHES FOR REDUCED PLANS 0 1 2 3

TRANSPORTATION & PUBLIC WORKS — Getting you there! — SONOMA COUNTY

COUNTY OF SONOMA
DEPARTMENT OF TRANSPORTATION & PUBLIC WORKS
JOHANNES J. HOEVERTSZ, P.E., DIRECTOR

STAGE CONSTRUCTION AND TRAFFIC HANDLING

GEYSERS ROAD BRIDGE OVER FRASIER CREEK REPLACEMENT PROJECT

BRIDGE NUMBER	20C0600
BUDGET NUMBER	C11005
FISCAL YEAR	2024-25
SHEET NUMBER	13
TOTAL SHEETS	41

Drawing name: \\cordova-fp2\CAD\214336 Frasier Creek - Sonoma County\Sheets\214336_ma-02.dwg Layout Tab: SC2 Jan 21,2025 - 10:43am CSilva

NOTES:

1. ROADWAY MAY BE TEMPORARILY CLOSED TO CONSTRUCT ROADWAY APPROACHES TO BRIDGE.
2. ROAD MUST BE OPEN FOR TRAFFIC AT THE END OF EVERY DAY.

STAGE 3:

1. ADJUST TRAFFIC CONTROL DEVICES TO SHIFT TRAFFIC TO NEW BRIDGE AND TO ONE LANE REDUCTION AT APPROACHES ON SOUTH SIDE OF GEYSERS ROAD.
2. REMOVE TEMPORARY BRIDGE, TEMPORARY ACCESS ROAD AND TEMPORARY CONTROL DEVICES.
3. CONSTRUCT HORIZONTAL DRAINS, REMAINING RSP, STRUCTURAL SECTION AND DRAINAGE SYSTEMS.

LEGEND: (THIS SHEET ONLY)

REMOVE BASE AND SURFACING (Temp ACCESS ROAD)

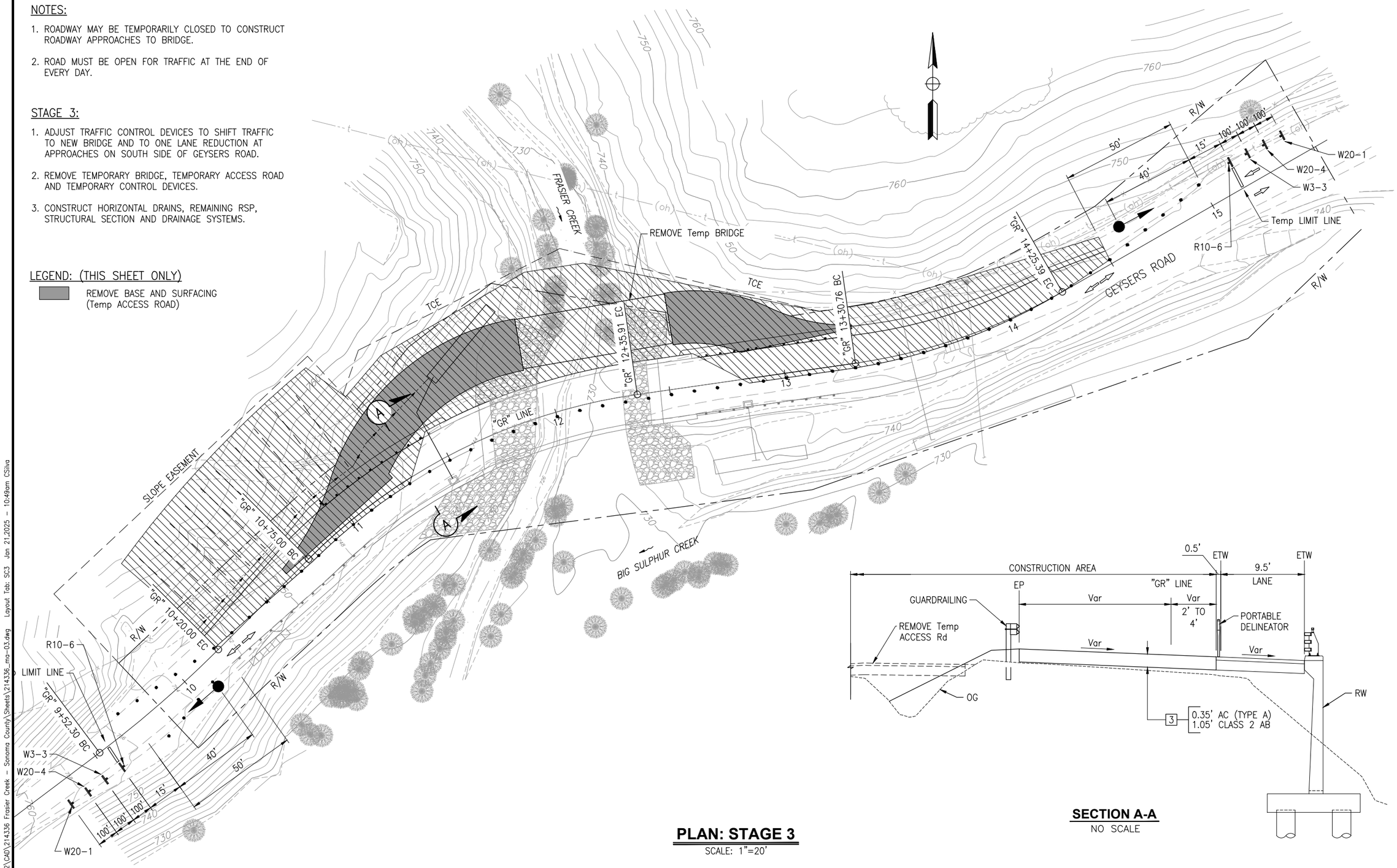

PLAN: STAGE 3

SCALE: 1"=20'

SECTION A-A

NO SCALE

APPROVED FOR STAGE CONSTRUCTION AND TRAFFIC HANDLING WORK ONLY

SC-3

DESIGN BY	M. BEEM
DRAWING BY	D. LOR
CHECKED BY	J. CONKLIN

REGISTERED CIVIL ENGINEER
JANUARY 24, 2025
PLANS APPROVAL DATE
FILENAME: 214336_MA-03.DWG

REGISTERED PROFESSIONAL ENGINEER JUSTINA L. CONKLIN No. 53183 Exp. 06/30/2025 CIVIL STATE OF CALIFORNIA

CONSTRUCTION COMPLETED:
"AS BUILT" INFORMATION TO BE COMPLETED AFTER CONSTRUCTION
RESIDENT ENGINEER
AS-BUILT DRAWINGS BY:

DATE	REVISION	BY	APPROVED

TRC 10680 White Rock Rd., Suite 100 Rancho Cordova, California 95670

ORIGINAL SCALE IN INCHES FOR REDUCED PLANS 0 1 2 3

COUNTY OF SONOMA
DEPARTMENT OF TRANSPORTATION & PUBLIC WORKS
JOHANNES J. HOEVERTSZ, P.E., DIRECTOR

STAGE CONSTRUCTION AND TRAFFIC HANDLING

GEYSERS ROAD BRIDGE OVER FRASIER CREEK REPLACEMENT PROJECT

BRIDGE NUMBER	20C0600
BUDGET NUMBER	C11005
FISCAL YEAR	2024-25
SHEET NUMBER	14
TOTAL SHEETS	41

Drawing name: \\rcordova-fp2\CAD\214336 Frasier Creek - Sonoma County\Sheets\214336_ma-03.dwg Layout Tab: SC3 Jan 21,2025 - 10:49am CSilva

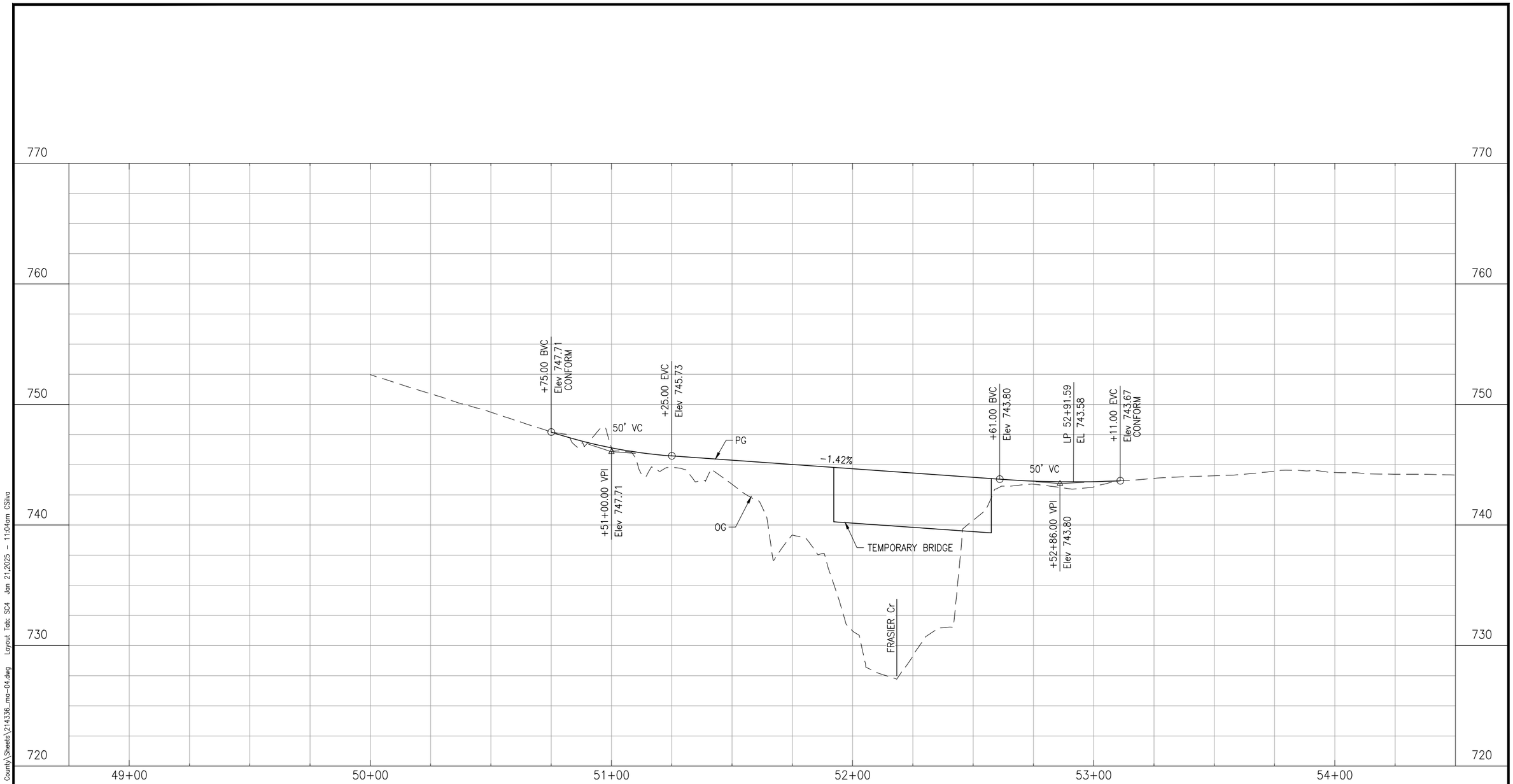

TEMPORARY ROAD ("GRT" LINE) PROFILE - STAGE 1

SCALE: 1" = 20' Horiz
1" = 4' Vert

SC-4

DESIGN BY	C. SILVA	Justina L. Conklin REGISTERED CIVIL ENGINEER	REGISTERED PROFESSIONAL ENGINEER JUSTINA L. CONKLIN No. 53183 Exp. 06/30/2025 CIVIL STATE OF CALIFORNIA	CONSTRUCTION COMPLETED: "AS BUILT" INFORMATION TO BE COMPLETED AFTER CONSTRUCTION RESIDENT ENGINEER AS-BUILT DRAWINGS BY:	TRC 10680 White Rock Rd., Suite 100 Rancho Cordova, California 95670	TRANSPORTATION & PUBLIC WORKS Getting you there! SONOMA COUNTY	COUNTY OF SONOMA DEPARTMENT OF TRANSPORTATION & PUBLIC WORKS JOHANNES J. HOEVERTSZ, P.E., DIRECTOR
DRAWING BY	D. LORENZO	JANUARY 24, 2025 PLANS APPROVAL DATE		DATE / REVISION / BY / APPROVED	ORIGINAL SCALE IN INCHES FOR REDUCED PLANS 0 1 2 3		
CHECKED BY	J. CONKLIN	FILENAME: 214336_MA-04.DWG					

STAGE CONSTRUCTION AND TRAFFIC HANDLING

GEYSERS ROAD BRIDGE OVER FRASIER CREEK REPLACEMENT PROJECT

BRIDGE NUMBER	20C0600
BUDGET NUMBER	C11005
FISCAL YEAR	2024-25
SHEET NUMBER	15
TOTAL SHEETS	41

Drawing name: \\cordova-fp2\CAD\214336 Frasier Creek - Sonoma County\Sheets\214336_ma-04.dwg Layout Tab: SC4 Jan 21,2025 - 11:04am CSilva

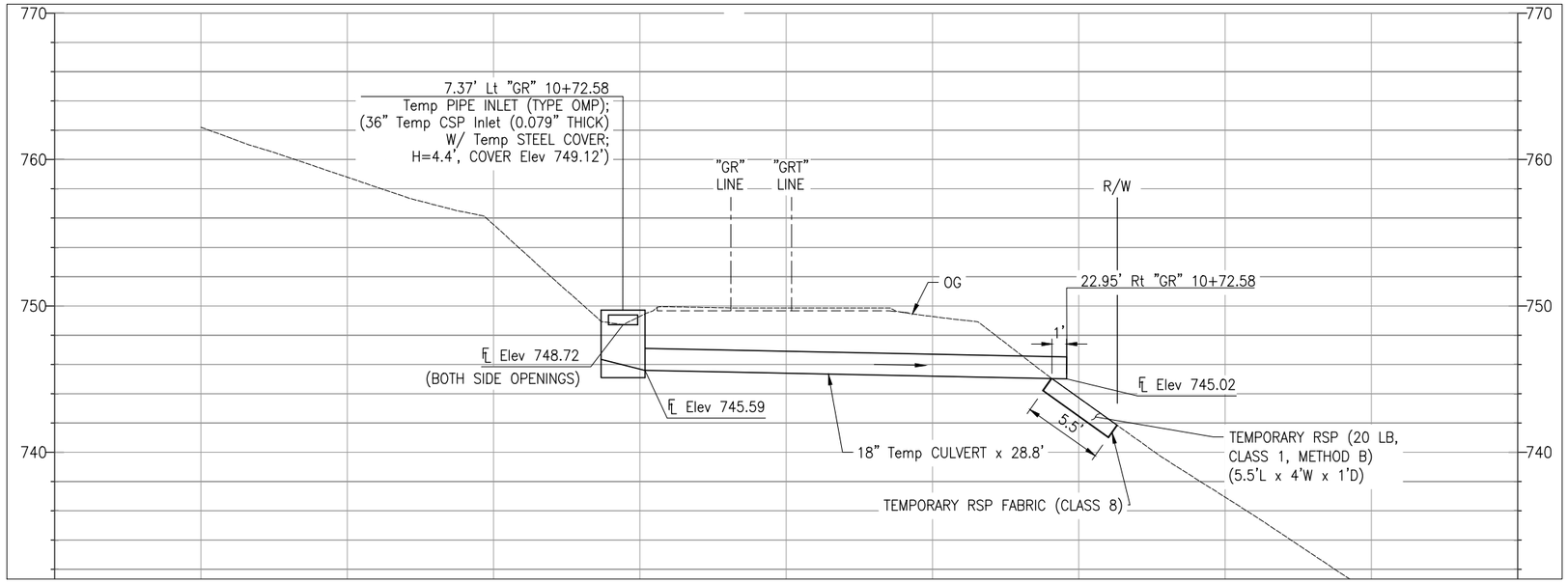

Temp DRAINAGE SYSTEM

SCALE: 1"=5' Horiz & Vert

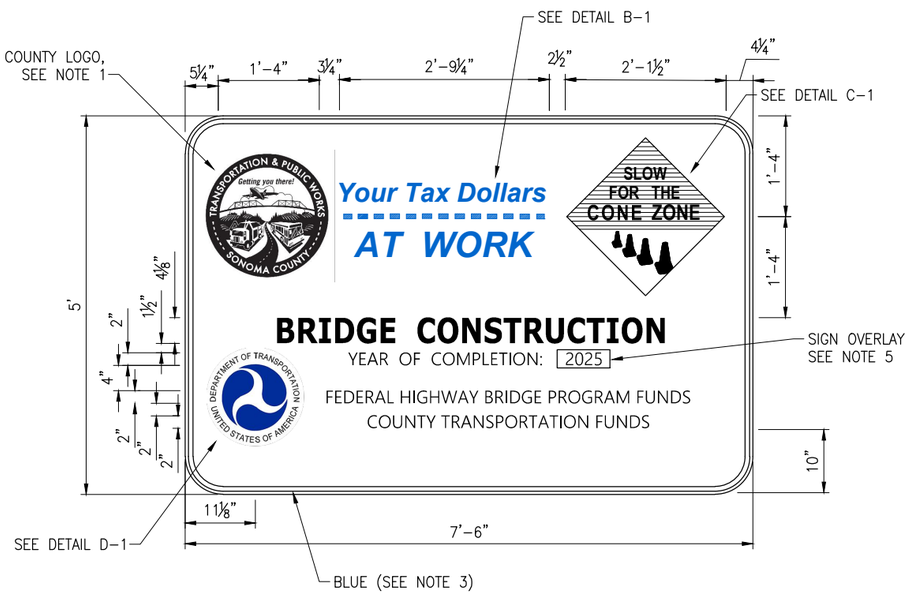

TYPE 1

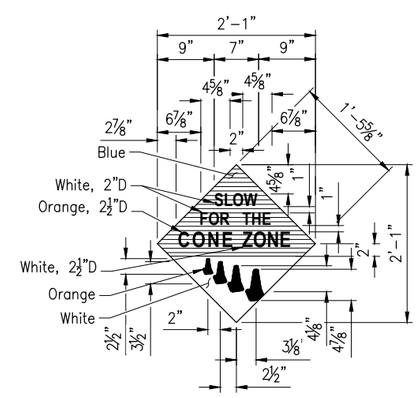

DETAIL C-1

(SEE NOTE 4)

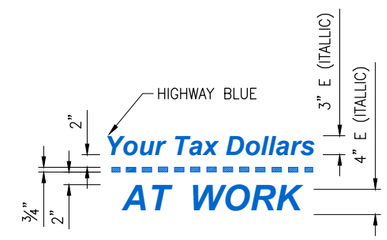

DETAIL B-1

(SEE NOTE 3)

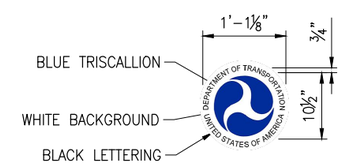

DETAIL D-1

NOTES: (PROJECT FUNDING SIGN)

1. COUNTY LOGO (IN COLOR) TO BE PROVIDED BY THE COUNTY.
2. EXCEPT AS OTHERWISE SHOWN, THE LEGEND OF THE SIGN MUST BE BLACK ON WHITE BACKGROUND (NON-REFLECTION).
3. THE BORDER OF THE SIGNS AND DETAILS "B-1" MUST BE BLUE (NON-REFLECTIVE).
4. THE DIAMOND IN DETAIL "C-1" MUST BE BLUE FOR THE BACKGROUND OF MESSAGE, "SLOW FOR THE CONE ZONE", AND WHITE BACKGROUND FOR THE ORANGE CONES. THE COLOR AND TYPE OF FONT FOR THE "SLOW FOR THE CONE ZONE" MESSAGE MUST BE: "SLOW" WHITE D; "FOR THE" WHITE D; "CONE" ORANGE ARIAL FONT; "ZONE" WHITE ARIAL FONT.
5. YEAR OF COMPLETION OF PROJECT CONSTRUCTION SHOWN ON THE OVERLAY IS AN EXAMPLE ONLY, SEE SPECIAL PROVISIONS.

CONSTRUCTION PROJECT FUNDING IDENTIFICATION SIGN

NO SCALE

SCD-1

DESIGN BY	M. BEEM	Justina L. Conklin REGISTERED CIVIL ENGINEER	REGISTERED PROFESSIONAL ENGINEER JUSTINA L. CONKLIN No. 53183 Exp. 06/30/2025 CIVIL STATE OF CALIFORNIA	CONSTRUCTION COMPLETED: "AS BUILT" INFORMATION TO BE COMPLETED AFTER CONSTRUCTION RESIDENT ENGINEER AS-BUILT DRAWINGS BY:	TRC 10680 White Rock Rd., Suite 100 Rancho Cordova, California 95670	COUNTY OF SONOMA DEPARTMENT OF TRANSPORTATION & PUBLIC WORKS JOHANNES J. HOEVERTSZ, P.E., DIRECTOR	STAGE CONSTRUCTION DETAILS
DRAWING BY	D. LORENZO	JANUARY 24, 2025 PLANS APPROVAL DATE		DATE / REVISION / BY / APPROVED	ORIGINAL SCALE IN INCHES FOR REDUCED PLANS 0 1 2 3		GEYSERS ROAD BRIDGE OVER FRASIER CREEK REPLACEMENT PROJECT
CHECKED BY	C. SILVA	FILENAME: 214336_MB-01.DWG					

BRIDGE NUMBER	20C0600
BUDGET NUMBER	C11005
FISCAL YEAR	2024-25
SHEET NUMBER	16
TOTAL SHEETS	41

Drawing name: \\rcordova-fp2\CAD\214336 Frasier Creek - Sonoma County\Sheets\214336_mb-01.dwg Layout Tab: SCD1 Jan 21,2025 - 11:10am CSilva

NOTE:

1. ALL TRAFFIC STRIPES SHALL BE FOUR (4") INCHES WIDE.

LEGEND:

- BEGIN/END OF TRAFFIC STRIPE DETAIL
- NO. TRAFFIC STRIPE DETAIL NUMBER
- OBJECT MARKER (TYPE P)
- OBJECT MARKER (TYPE L-1)
- GUARD RAILING DELINEATOR (35' Max SPACING)
- DIRECTION OF TRAFFIC

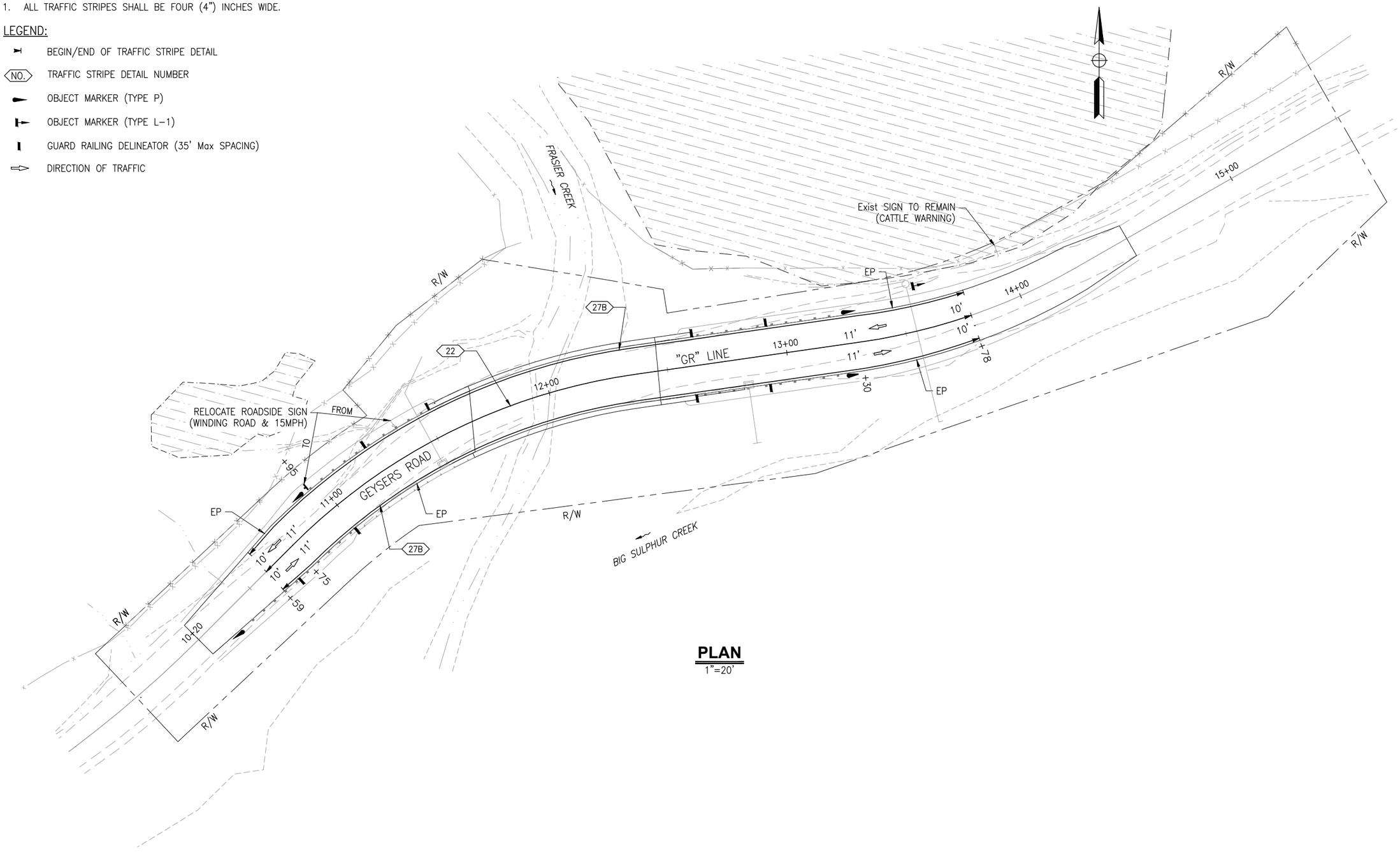

PLAN
1"=20'

APPROVED FOR PAVEMENT DELINEATION AND SIGN WORK ONLY

PD-1

DESIGN BY	M. BEEM
DRAWING BY	M. BEEM
CHECKED BY	C. SILVA

Justina L. Conklin
REGISTERED CIVIL ENGINEER
JANUARY 24, 2025
PLANS APPROVAL DATE

REGISTERED PROFESSIONAL ENGINEER JUSTINA L. CONKLIN No. 53183 Exp. 06/30/2025 CIVIL STATE OF CALIFORNIA

FILENAME: 214336_NA-01.DWG

CONSTRUCTION COMPLETED:
"AS BUILT" INFORMATION TO BE COMPLETED AFTER CONSTRUCTION
RESIDENT ENGINEER
AS-BUILT DRAWINGS BY:

DATE	REVISION	BY	APPROVED

TRC
10680 White Rock Rd.,
Suite 100
Rancho Cordova, California 95670

ORIGINAL SCALE IN INCHES FOR REDUCED PLANS 0 1 2 3

COUNTY OF SONOMA
DEPARTMENT OF TRANSPORTATION & PUBLIC WORKS
JOHANNES J. HOEVERTSZ, P.E., DIRECTOR

PAVEMENT DELINEATION AND SIGN PLAN

GEYSERS ROAD BRIDGE OVER
FRASIER CREEK
REPLACEMENT PROJECT

BRIDGE NUMBER	20C0600
BUDGET NUMBER	C11005
FISCAL YEAR	2024-25
SHEET NUMBER	17
TOTAL SHEETS	41

Drawing name: \\ccordova-fp2\CAD\214336 Frasier Creek - Sonoma County\Sheets\214336_na-01.dwg Layout Tab: PD1 Jan 21,2025 - 11:17am CSilva

PLANT LEGEND

PLANT GROUP (SIZE)	PLANT No.	SYMBOL	BOTANICAL NAME	COMMON NAME	WATER USE CLASSIFICATION	HOLE SIZE DIAMETER INCH	HOLE SIZE DEPTH INCH	BASIN TYPE	WOOD MULCH BASIN CF	APPLICATION RATES SOIL AMENDMENT CF	ON CENTER SPACING ft	FOLIAGE PROTECTION	REMARKS
M (LINER)	1		ACER MACROPHYLLUM	BIG LEAF MAPLE	MEDIUM	2	3	II	2	0.25	1	4	
	2		ALNUS RHOMBIFOLIA	WHITE ALDER	HIGH	2	3	II	2	0.25	1	4	
	3		QUERCUS LOBATA	VALLEY OAK	LOW	2	3	II	2	0.25	1	4	
	4		UMBELLULARIA CALIFORINICA	BAY LAUREL	MEDIUM	2	3	II	2	0.25	1	4	
H (CUTTING)	5		SALIX LAEVIGATA	RED WILLOW	HIGH					0.30	1		5 6 7
	6		SALIX LASIOLEPIS	ARROYO WILLOW	HIGH					0.30	1		5 6 7
O (SEED)	7		AESCULUS CALIFORNICA	CALIFORNIA BUCKEYE	VERY LOW	5	5	II	2	0.02	1	4	8

APPLICABLE WHERE CIRCLED:

1 – AS SHOWN
2 – 2X ROOT BALL WIDTH
3 – SUFFICIENT TO RECEIVE ROOT BALL
4 – SEE STANDARD DETAILS
5 – SEE DETAIL
6 – SEE SPECIAL PROVISION
7 – TAKE CUTTINGS FROM NEARBY AREAS APPROVED BY THE ENGINEER
8 – COLLECT SEED FROM NEARBY AREAS APPROVED BY THE ENGINEER

PLANT QUANTITIES

BOTANICAL NAME	COMMON NAME	PLANT GROUP M (LINER)	PLANT GROUP H (CUTTING)	PLANT GROUP O (SEED)	PLANT BASIN WOOD MULCH	PLANT BASIN SOIL AMENDMENT	PLANT TUBE	FOLIAGE PROTECTOR
		EA	EA	EA	CY	CY	EA	EA
ACER MACROPHYLLUM	BIG LEAF MAPLE	6			0.44	0.06		6
AESCULUS CALIFORNICA	CALIFORNIA BUCKEYE			8				
ALNUS RHOMBIFOLIA	WHITE ALDER	12			0.89	0.11		12
QUERCUS LOBATA	VALLEY OAK	6			0.44	0.06		6
SALIX LAEVIGATA	RED WILLOW		14				14	
SALIX LASIOLEPIS	ARROYO WILLOW		23				23	
UMBELLULARIA CALIFORNICA	BAY LAUREL	5			0.37	0.05		5
TOTAL		29	37	8	2.15	0.69	37	37

PL-1

DESIGN BY	P. BOYD
DRAWING BY	K. JONES
CHECKED BY	P. BOYD

LICENSED LANDSCAPE ARCHITECT
Jan. 24, 2025
PLANS APPROVAL DATE
FILENAME: 214336_ST-001.DWG

LICENSED LANDSCAPE ARCHITECT J. Patrick Boyd, No. 4882 STATE OF CALIFORNIA
JULY 31, 2025
Jan. 24, 2025

CONSTRUCTION COMPLETED:
"AS BUILT" INFORMATION TO BE COMPLETED AFTER CONSTRUCTION
RESIDENT ENGINEER
AS-BUILT DRAWINGS BY:

DATE	REVISION	BY	APPROVED

designlab 252
P.O. Box 27616 Fresno, CA 93729
Studio: 559.472.9966 Fax: 559.472.9969

ORIGINAL SCALE IN INCHES FOR REDUCED PLANS 0 1 2 3

COUNTY OF SONOMA
DEPARTMENT OF TRANSPORTATION & PUBLIC WORKS
JOHANNES J. HOEVERTSZ, P.E., DIRECTOR

PLANT LEGEND

GEYSERS ROAD BRIDGE OVER FRASIER CREEK REPLACEMENT PROJECT

BRIDGE NUMBER	20C0600
BUDGET NUMBER	C11005
FISCAL YEAR	2024-25
SHEET NUMBER	18
TOTAL SHEETS	41

Drawing name: D:\DL252 Dropbox\DL252 Team Folder\PROJECTS\2024\24-10-004 Frasier Cr. Br\05-CAD\5.01-PLANS\5.01.5-LANDSCAPE PLAN\5.01.5.1.0-WORKING DRAWING\214336_st-001.dwg Layout Tab: PL-1 Jan 22,2025 - 2:14pm Konni

APPROVED FOR PLANTING WORK ONLY

PP-1

DESIGN BY	P. BOYD
DRAWING BY	K. JONES
CHECKED BY	P. BOYD

LICENSED LANDSCAPE ARCHITECT

Jan. 24, 2025

PLANS APPROVAL DATE

FILENAME: 214336_SU-001.DWG

LICENSED LANDSCAPE ARCHITECT — J. Patrick Boyd, No. 4862 — JULY 31, 2025 — STATE OF CALIFORNIA

CONSTRUCTION COMPLETED:

"AS BUILT" INFORMATION TO BE COMPLETED AFTER CONSTRUCTION

RESIDENT ENGINEER

AS-BUILT DRAWINGS BY:

DATE	REVISION	BY	APPROVED

designlab 252

P.O. Box 27616 Fresno, CA 93729

Studio: 559.472.9966 Fax: 559.472.9969

ORIGINAL SCALE IN INCHES FOR REDUCED PLANS 0 1 2 3

COUNTY OF SONOMA

DEPARTMENT OF TRANSPORTATION & PUBLIC WORKS

JOHANNES J. HOEVERTSZ, P.E., DIRECTOR

PLANTING PLAN

GEYSERS ROAD BRIDGE OVER FRASIER CREEK REPLACEMENT PROJECT

BRIDGE NUMBER	20C0600
BUDGET NUMBER	C11005
FISCAL YEAR	2024-25
SHEET NUMBER	19
TOTAL SHEETS	41

Drawing name: D:\DL252 Dropbox\DL252 Team Folder\PROJECTS\2024\24-10-004 Frasier Cr. Br\05-CAD\5.01-PLANS\5.01.5-LANDSCAPE PLAN\5.01.5.1.0-WORKING DRAWING\214336_su-001.dwg Layout Tab: PP-1 Jan 22,2025 - 2:13pm Konni

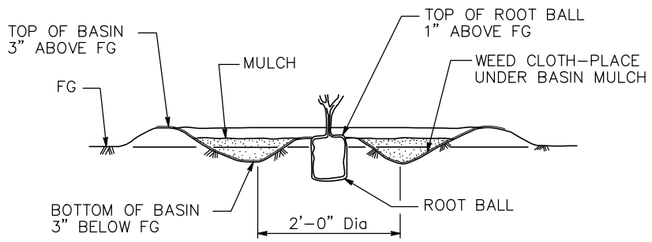

SECTION
(Flat Area)

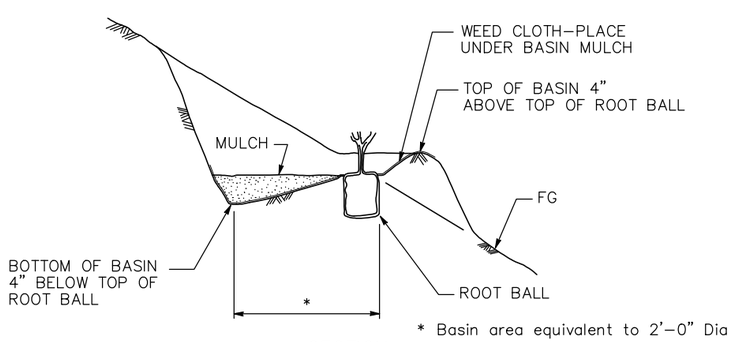

SECTION
(Slope Area)

BASIN TYPE II-MODIFIED

NO SCALE

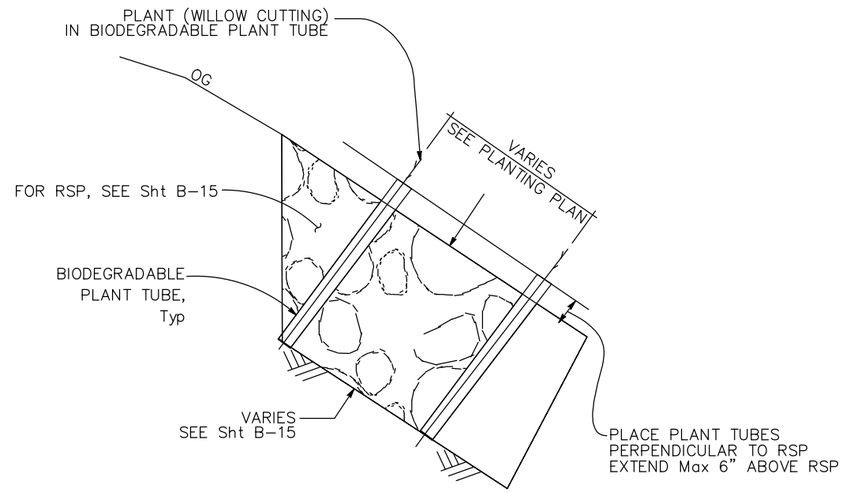

SECTION

PLANT TUBES IN RSP

NO SCALE

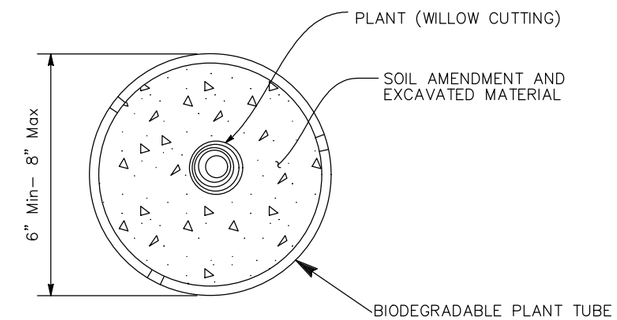

PLAN

PLANT TUBES

NO SCALE

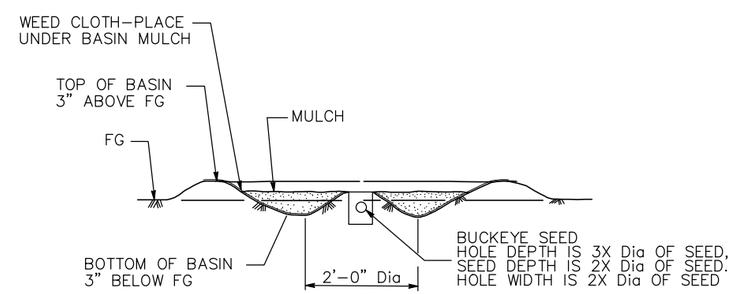

SECTION

BUCKEYE SEED PLANTING

NO SCALE

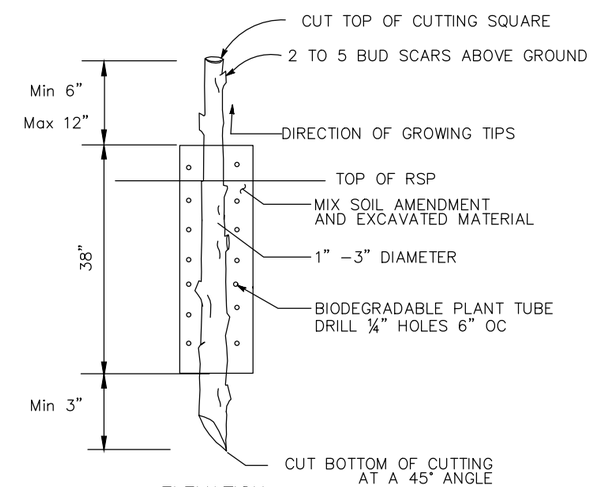

ELEVATION

WILLOW CUTTING IN PLANT TUBES

NO SCALE

PLD-1

DESIGN BY	P. BOYD	LICENSED LANDSCAPE ARCHITECT Jan. 24, 2025 PLANS APPROVAL DATE FILENAME: 214336_SV-001.DWG	CONSTRUCTION COMPLETED: "AS BUILT" INFORMATION TO BE COMPLETED AFTER CONSTRUCTION RESIDENT ENGINEER AS–BUILT DRAWINGS BY:	designlab 252 P.O. Box 27616 Fresno, CA 93729 Studio: 559.472.9966 Fax: 559.472.9969	COUNTY OF SONOMA DEPARTMENT OF TRANSPORTATION & PUBLIC WORKS JOHANNES J. HOEVERTSZ, P.E., DIRECTOR	PLANTING DETAILS	BRIDGE NUMBER 20C0600
DRAWING BY	K. JONES		DATE / REVISION / BY / APPROVED			GEYSERS ROAD BRIDGE OVER FRASIER CREEK REPLACEMENT PROJECT	BUDGET NUMBER C11005
CHECKED BY	P. BOYD			ORIGINAL SCALE IN INCHES FOR REDUCED PLANS 0 1 2 3			FISCAL YEAR 2024–25
							SHEET NUMBER 20
							TOTAL SHEETS 41

Drawing name: D:\DL252 Dropbox\DL252 Team Folder\PROJECTS\2024\24-10-004 Frasier Cr. Br\05-CAD\5.01-PLANS\5.01.5-LANDSCAPE PLAN\5.01.5.1.0-WORKING DRAWING\214336_sv-001.dwg Layout Tab: PLD-1 Jan 22,2025 - 2:12pm Konni

EROSION CONTROL TYPE 1

SEQUENCE	ITEM	MATERIAL		APPLICATION RATE
		DESCRIPTION	TYPE	
STEP 1	HYDROMULCH	FIBER	WOOD	2500 LB/ACRE
		TACKIFIER	PSYLLIUM	150 LB/ACRE
STEP 2	RECP (NETTING)	NETTING	TYPE B	8-GAUGE, 8 INCH STEEL STAPLE

EROSION CONTROL TYPE 2

SEQUENCE	ITEM	MATERIAL		APPLICATION RATE	DEPTH
		DESCRIPTION	TYPE		
STEP 1	COMPOST	COMPOST	FINE	270 CY/ACRE	2"
STEP 2	HYDROSEED	SEED	SEED MIX #1	37 LB/ACRE	
		FIBER	WOOD	2500 LB/ACRE	
		TACKIFIER	PSYLLIUM	150 LB/ACRE	
STEP 3	RECP (NETTING)	NETTING	TYPE B	8-GAUGE, 8 INCH STEEL STAPLE	

EROSION CONTROL TYPE 3

SEQUENCE	ITEM	MATERIAL		APPLICATION RATE	DEPTH
		DESCRIPTION	TYPE		
STEP 1	COMPOST	COMPOST	FINE	270 CY/ACRE	2"
STEP 2	HYDROSEED	SEED	SEED MIX #2	10 LB/ACRE	
		FIBER	WOOD	2500 LB/ACRE	
		TACKIFIER	PSYLLIUM	150 LB/ACRE	

COMPOST SOCK

SEQUENCE	ITEM	MATERIAL	MATERIAL TYPE
INSTALL BEFORE EC TYPE 2	COMPOST SOCK	COMPOST FILLED BIODEGRADABLE TUBE	8" DIA

SEED MIX #1

BOTANICAL NAME (COMMON NAME)	PERCENT GERMINATION (MINIMUM)	POUNDS PURE LIVE SEED PER ACRE (SLOPE MEASUREMENT)
ACHILLEA MILLEFOLIUM (WHITE YARROW)	49	1
AMSINCKIA MENZIESII (COMMON FIDDLENECK)	22	5
BROMIUS CARINATUS (CALIFORNIA BROME)	47	10
ESCHSCHOLZIA CALIFORNICA (CALIFORNIA POPPY)	48	1
FESTUCA MICROSTACHYS (SMALL FESCUE)	48	7
FESTUCA OCTOFLORA (SIXWEEKS FESCUE)	48	2
LASTHENIA CALIFORNICA (CALIFORNIA GOLDFIELDS)	45	1
STIPA PULCHRA (PURPLE NEEDLEGRASS)	48	10

SEED MIX #2

BOTANICAL NAME (COMMON NAME)	PERCENT GERMINATION (MINIMUM)	POUNDS PURE LIVE SEED PER ACRE (SLOPE MEASUREMENT)
BACCHARIS PILULARIS (CHAPARRAL BROME)	5	1
CAREX BARBARAE (SANTA BARBARA SEDGE)	45	1
ELYMUS TRITICOIDES (BEARDLESS WILDRYE)	45	5
JUNCUS BALTICUS (BALTIC RUSH)	45	1
JUNCUS BUFONIUS (TOAD RUSH)	45	1
JUNCUS MEXICANUS (MEXICAN RUSH)	45	1

EROSION CONTROL QUANTITIES

	HYDROMULCH	COMPOST	HYDROSEED	ROLLED EROSION CONTROL PRODUCT (NETTING)	COMPOST SOCK
	SQFT	CY	SQFT	SQFT	LF
TYPE 1	340			340	
TYPE 2		62.2	10,040	10,040	
TYPE 3		4.5	720		
COMPOST SOCK					732
TOTALS	340	66.7	10,760	10,380	732

ECL-1

DESIGN BY	P. BOYD
DRAWING BY	K. JONES
CHECKED BY	P. BOYD

LICENSED LANDSCAPE ARCHITECT
Jan. 24, 2025
PLANS APPROVAL DATE
FILENAME: 214336_TC-001.DWG

LICENSED LANDSCAPE ARCHITECT — J. Patrick Boyd, No. 4822 — JULY 31, 2025 — Jan. 24, 2025 — STATE OF CALIFORNIA

CONSTRUCTION COMPLETED:
"AS BUILT" INFORMATION TO BE COMPLETED AFTER CONSTRUCTION
RESIDENT ENGINEER
AS-BUILT DRAWINGS BY:

DATE	REVISION	BY	APPROVED

designlab 252
P.O. Box 27616 Fresno, CA 93729
Studio: 559.472.9966 Fax: 559.472.9969

ORIGINAL SCALE IN INCHES FOR REDUCED PLANS 0 1 2 3

COUNTY OF SONOMA
DEPARTMENT OF TRANSPORTATION & PUBLIC WORKS
JOHANNES J. HOEVERTSZ, P.E., DIRECTOR

EROSION CONTROL LEGEND

GEYSERS ROAD BRIDGE OVER FRASIER CREEK REPLACEMENT PROJECT

BRIDGE NUMBER	20C0600
BUDGET NUMBER	C11005
FISCAL YEAR	2024-25
SHEET NUMBER	21
TOTAL SHEETS	41

Drawing name: D:\DI.252 Dropbox\DI.252 Team Folder\PROJECTS\2024\24-10-004 Frasier Cr. Br\05-CAD\5.01-PLANS\5.01.5-LANDSCAPE PLAN\5.01.5.1.0-WORKING DRAWING\214336_tc-001.dwg Layout Tab: ECL-1 Jan 22,2025 - 4:56pm Konni

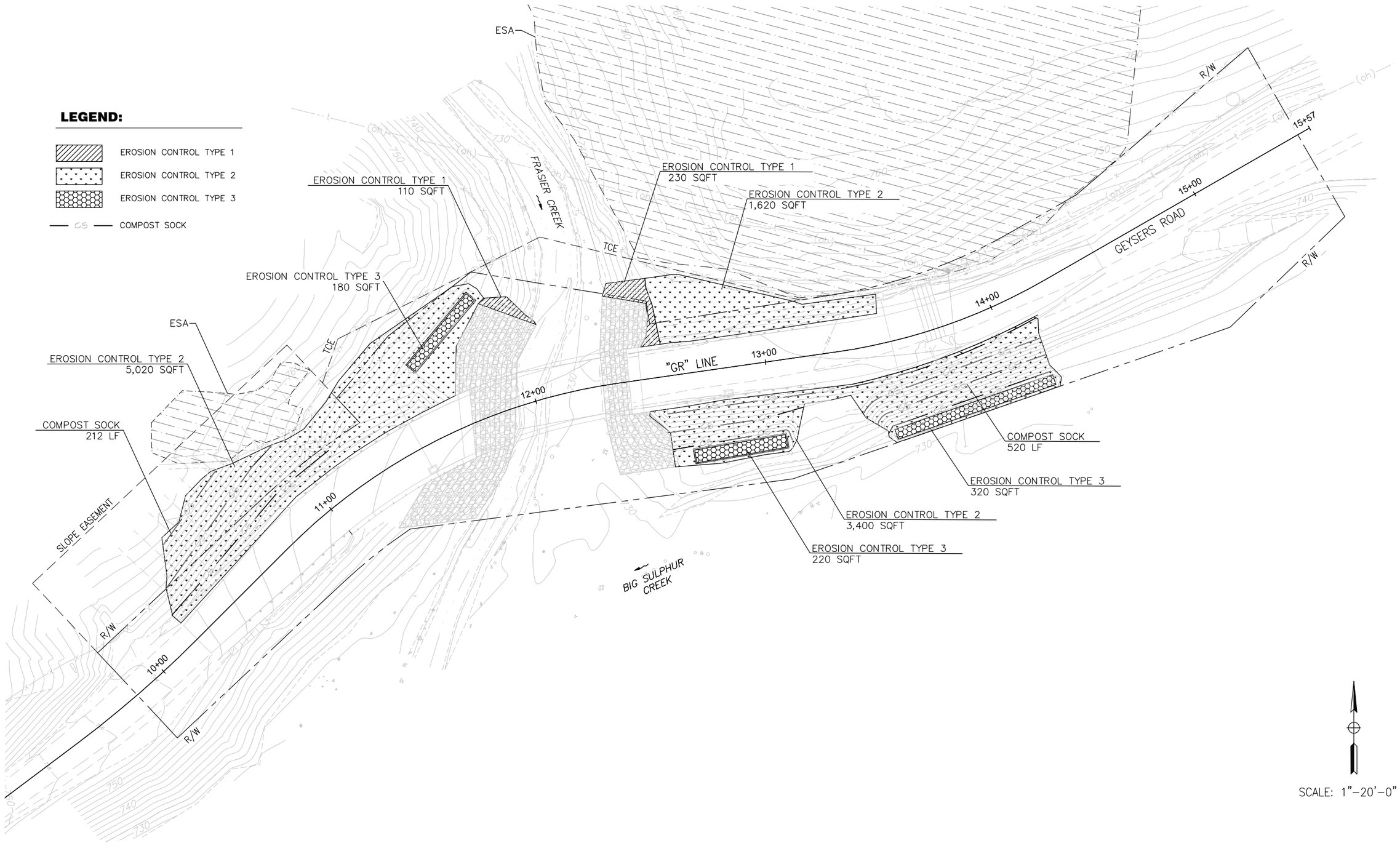

APPROVED FOR EROSION CONTROL WORK ONLY

EC-1

DESIGN BY	P. BOYD
DRAWING BY	K. JONES
CHECKED BY	P. BOYD

LICENSED LANDSCAPE ARCHITECT

Jan. 24, 2025

PLANS APPROVAL DATE

FILENAME: 214336_TE-001.DWG

LICENSED LANDSCAPE ARCHITECT — Patrick Boyd, No. 4882 — JULY 31, 2025 — Jan. 24, 2025 — STATE OF CALIFORNIA

CONSTRUCTION COMPLETED:

"AS BUILT" INFORMATION TO BE COMPLETED AFTER CONSTRUCTION

RESIDENT ENGINEER

AS-BUILT DRAWINGS BY:

DATE	REVISION	BY	APPROVED

designlab 252

P.O. Box 27616 Fresno, CA 93729

Studio: 559.472.9966 Fax: 559.472.9969

ORIGINAL SCALE IN INCHES FOR REDUCED PLANS 0 1 2 3

COUNTY OF SONOMA

DEPARTMENT OF TRANSPORTATION & PUBLIC WORKS

JOHANNES J. HOEVERTSZ, P.E., DIRECTOR

EROSION CONTROL PLAN

GEYSERS ROAD BRIDGE OVER FRASIER CREEK REPLACEMENT PROJECT

BRIDGE NUMBER	20C0600
BUDGET NUMBER	C11005
FISCAL YEAR	2024-25
SHEET NUMBER	22
TOTAL SHEETS	41

Drawing name: D:\DI.252 Dropbox\DI.252 Team Folder\PROJECTS\2024\24-10-004 Frasier Cr. Br\05-CAD\5.01-PLANS\5.01.5-LANDSCAPE PLAN\5.01.5.1.0-WORKING DRAWING\214336_te-001.dwg Layout Tab: EC-1 Jan 22,2025 - 2:13pm Konni

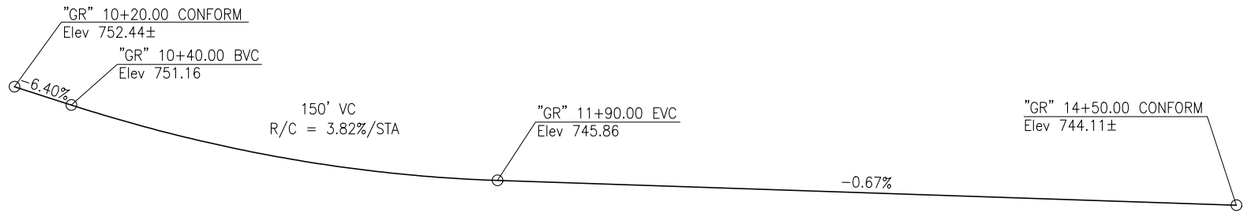

"GR" LINE PROFILE GRADE

NO SCALE

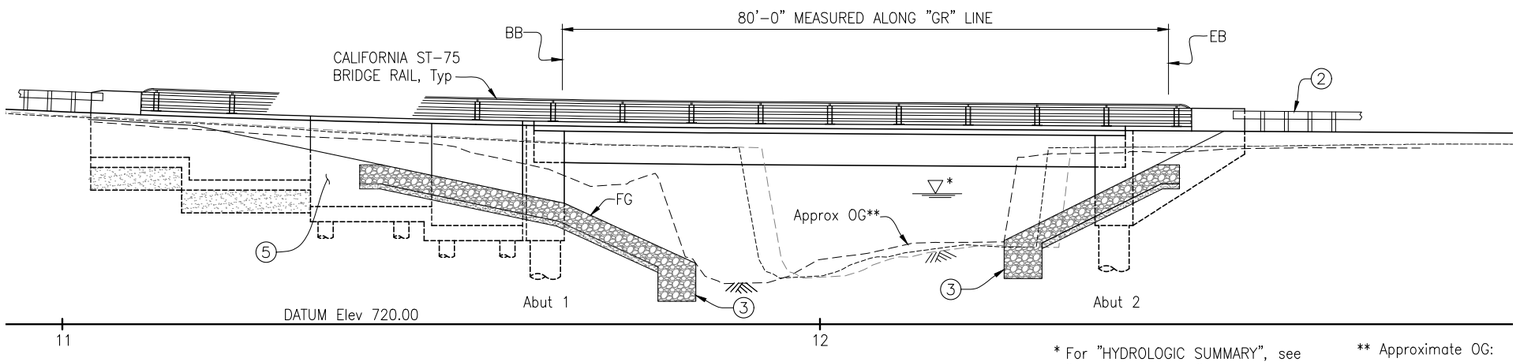

* For "HYDROLOGIC SUMMARY", see "FOUNDATION PLAN" sheet

** Approximate OG:
- - - - - Along Rt Side of Bridge
- - - - - - - - - Along "GR" Line
- - - - - Along Lt Side of Bridge

DEVELOPED ELEVATION

1"=10'

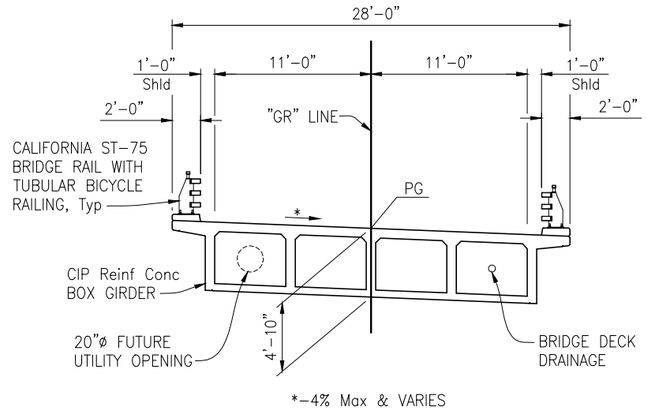

TYPICAL SECTION

3/16"=1'-0"

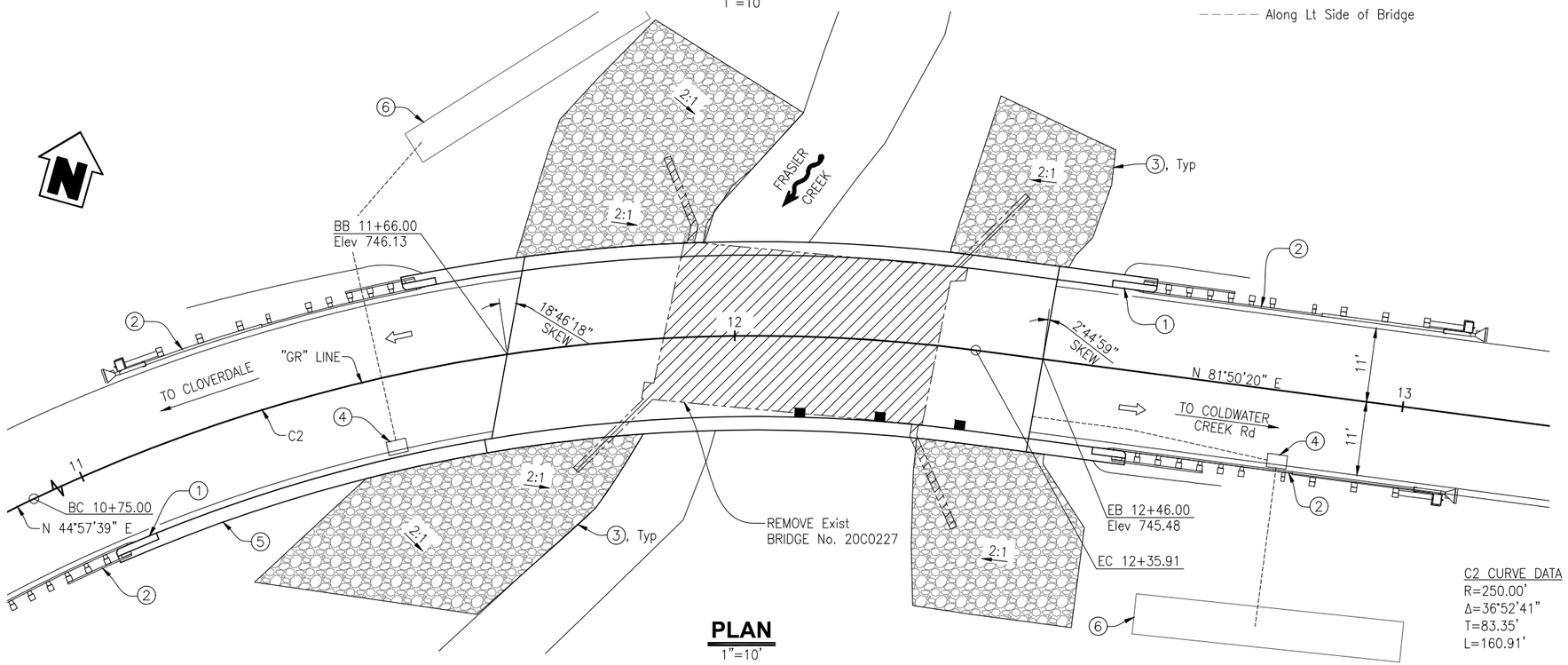

PLAN

1"=10'

C2 CURVE DATA
R=250.00'
Δ=36°52'41"
T=83.35'
L=160.91'

NOTES:

1. For "GENERAL NOTES", "INDEX TO PLANS", "STANDARD PLANS" list, "CONCRETE STRENGTH AND TYPE LIMITS" and "QUANTITIES", see "INDEX TO PLANS" sheet.

(1) Paint "GEYSERS ROAD BRIDGE OVER FRASIER CREEK 20C0600" Year Constructed (see "BRIDGE RAIL – EMBOSSED YEAR BUILT" sheet)

(2) MGS, see ROAD PLANS

(3) Rock Slope Protection

(4) DI, see ROAD PLANS

(5) Retaining Wall No. 11

(6) Bioretention Swale, see ROAD PLANS

LEGEND:

- Existing Structure
- Bridge Removal
- Direction of Flow
- Direction of Traffic
- Deck Drain Type D-2

B-1

DESIGN BY	T. ARCAYA	REGISTERED CIVIL ENGINEER	CONSTRUCTION COMPLETED: "AS BUILT" INFORMATION TO BE COMPLETED AFTER CONSTRUCTION RESIDENT ENGINEER AS BUILT DRAWINGS BY:	TRC 10680 White Rock Rd., Suite 100 Rancho Cordova, California 95670	COUNTY OF SONOMA DEPARTMENT OF TRANSPORTATION & PUBLIC WORKS JOHANNES HOEVERTSZ, P.E., DIRECTOR	BRIDGE NUMBER 20C0600
DRAWING BY	G. IMBSEN	January 24, 2025 PLANS APPROVAL DATE	DATE / REVISION / BY / APPROVED	ORIGINAL SCALE IN INCHES FOR REDUCED PLANS 0 1 2 3	GENERAL PLAN	BUDGET NUMBER C11005
CHECKED BY	M. FUSTOK	FILENAME: 04_20C05XX-A-GP01.DWG	REGISTERED PROFESSIONAL ENGINEER CAMERON J. PINKERTON No. 73288 Exp. 12/31/26 CIVIL STATE OF CALIFORNIA		GEYSERS ROAD BRIDGE OVER FRASIER CREEK REPLACEMENT PROJECT	FISCAL YEAR 2024-25 / SHEET NUMBER 23 / TOTAL SHEETS 41

Drawing name: H:\214336 Frasier Creek – Sonoma County\Structures\04_20C05XX-a-gp01.dwg Layout Tab: GP Jan 21,2025 – 6:33am gimbsen

GENERAL NOTES
LOAD AND RESISTANCE FACTOR DESIGN

DESIGN:

AASHTO LRFD Bridge Design Specifications, 8th edition and the Caltrans Amendments Preface dated April 2019.
Caltrans Standard Plans and Specifications, 2023 Edition, with Revised Standard Plans, dated January 2024.

SEISMIC DESIGN:

Caltrans Seismic Design Criteria (SDC), Version 2.0 dated April 2019.

DEAD LOAD:

Includes 35 psf for future wearing surface and 300 lb/ft for future utilities.

LIVE LOADING:

HL93 and permit design load

SEISMIC LOADING:

Soil profile: 320 m/s (1,050 ft/sec)
Moment Magnitude: Mmax = 7.01
Peak Ground Acceleration 0.87g
See ARS Curve

REINFORCED CONCRETE:

fy = 60 ksi
f'c = See "CONCRETE STRENGTH AND TYPE LIMITS"
n = 8

PILE FOOTING DATA:

See table on "FOUNDATION PLAN" sheet.

DECK DRAINAGE:

I = 5.0 in/hr
T = 1 ft width of flow allowed

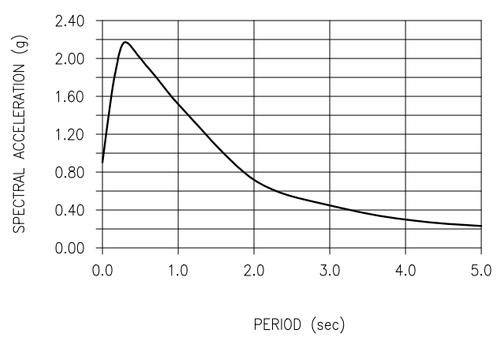

ARS CURVE

CALTRANS STANDARD PLANS
DATED 2023

A10A	LEGEND – LINES AND SYMBOLS (SHEET 1 OF 5)
A10B	LEGEND – LINES AND SYMBOLS (SHEET 2 OF 5)
A10C	LEGEND – LINES AND SYMBOLS (SHEET 3 OF 5)
A10D	LEGEND – LINES AND SYMBOLS (SHEET 4 OF 5)
A10E	LEGEND – LINES AND SYMBOLS (SHEET 5 OF 5)
A10F	LEGEND – SOIL (SHEET 1 OF 2)
A10G	LEGEND – SOIL (SHEET 2 OF 2)
A10H	LEGEND – ROCK
A62C	LIMITS OF PAYMENT FOR EXCAVATION AND BACKFILL–BRIDGE
B0–1	BRIDGE DETAILS
B0–3	BRIDGE DETAILS
B0–5	BRIDGE DETAILS
B0–13	BRIDGE DETAILS
B2–3	16" AND 24" CAST–IN–DRILLED–HOLE CONCRETE PILE
B3–1A	RETAINING WALL TYPE 1 (CASE 1)
B3–5	RETAINING WALL DETAILS No. 1
B6–21	JOINT SEALS (MAXIMUM MOVEMENT RATING = 2")
B7–1	BOX GIRDER DETAILS
B7–6	DECK DRAINS TYPE D–1 AND D–2
B7–8	DECK DRAINAGE DETAILS
B7–10	UTILITY OPENING BOX GIRDER
RSP B11–200	CALIFORNIA ST–75 BRIDGE RAIL DETAILS No. 1
RSP B11–201	CALIFORNIA ST–75 BRIDGE RAIL DETAILS No. 2
RSP B11–202	CALIFORNIA ST–75 BRIDGE RAIL DETAILS No. 3
RSP B11–220	CALIFORNIA BRIDGE RAIL ST–75, ST–75SW, ST–76, AND ST–76SW POST AND RAIL DETAILS
RSP B11–221	CALIFORNIA BRIDGE RAIL ST–75, ST–75SW, ST–76, AND ST–76SW RAIL SPLICE DETAILS
RSP B11–222	CALIFORNIA BRIDGE RAIL ST–75, ST–75SW, ST–76, AND ST–76SW PARAPET SHOE DETAIL
B14–5	WATER SUPPLY LINE (DETAILS) (PIPE SIZES LESS THAN 4")

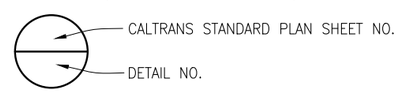

INDEX TO PLANS

SHEET NO.	TITLE
B–1	GENERAL PLAN
B–2	INDEX TO PLANS
B–3	DECK CONTOURS
B–4	FOUNDATION PLAN
B–5	ABUTMENT LAYOUT
B–6	ABUTMENT DETAILS No. 1
B–7	ABUTMENT DETAILS No. 2
B–8	ABUTMENT DETAILS No. 3
B–9	RETAINING WALL LAYOUT
B–10	RETAINING WALL DETAILS
B–11	TYPICAL SECTION
B–12	GIRDER LAYOUT
B–13	GIRDER REINFORCEMENT
B–14	DECK DRAINAGE DETAILS
B–15	ROCK SLOPE PROTECTION
B–16	TEMPORARY DETOUR
B–17	BRIDGE RAIL – EMBOSSED YEAR BUILT
B–18	TEST BORING LAYOUT
B–19	LOG OF TEST BORING (1 OF 1)

NOTE:

1. Rebar clearance to be 2" unless noted otherwise.

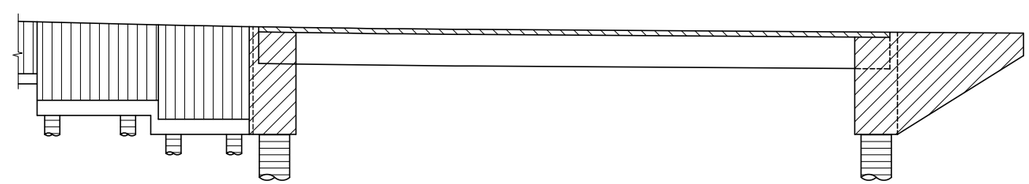

CONCRETE STRENGTH AND TYPE LIMITS

Not to Scale

- Structural Concrete, Bridge (Polymer Fiber)(4,000 psi at 28 days)
- Structural Concrete, Bridge (4,000 psi at 28 days)
- Structural Concrete, Bridge (3,600 psi at 28 days)
- Cast–In–Drilled Hole Concrete Piling (4,000 psi at 28 days)
- Structural Concrete, Retaining Wall (3,600 psi at 28 days)

B-2

DESIGN BY	T. ARCAYA
DRAWING BY	G. IMBSEN
CHECKED BY	M. FUSTOK

REGISTERED CIVIL ENGINEER
January 24, 2025
PLANS APPROVAL DATE
FILENAME: 04_20C05XX–B–GNOTES.DWG

REGISTERED PROFESSIONAL ENGINEER CAMERON J. PINKERTON No. 73288 Exp. 12/31/26 CIVIL STATE OF CALIFORNIA

CONSTRUCTION COMPLETED:
"AS BUILT" INFORMATION TO BE COMPLETED AFTER CONSTRUCTION
RESIDENT ENGINEER
AS BUILT DRAWINGS BY:

DATE	REVISION	BY	APPROVED

TRC 10680 White Rock Rd., Suite 100 Rancho Cordova, California 95670

ORIGINAL SCALE IN INCHES FOR REDUCED PLANS 0 1 2 3

COUNTY OF SONOMA
DEPARTMENT OF TRANSPORTATION & PUBLIC WORKS
JOHANNES HOEVERTSZ, P.E., DIRECTOR

INDEX TO PLANS

GEYSERS ROAD BRIDGE OVER FRASIER CREEK REPLACEMENT PROJECT

BRIDGE NUMBER	20C0600
BUDGET NUMBER	C11005
FISCAL YEAR	2024–25
SHEET NUMBER	24
TOTAL SHEETS	41

Drawing name: H:\214336 Frasier Creek – Sonoma County\Structures\04_20C05XX–b–gnotes.dwg Layout Tab: ITP Jan 16,2025 – 3:19pm gimbsen

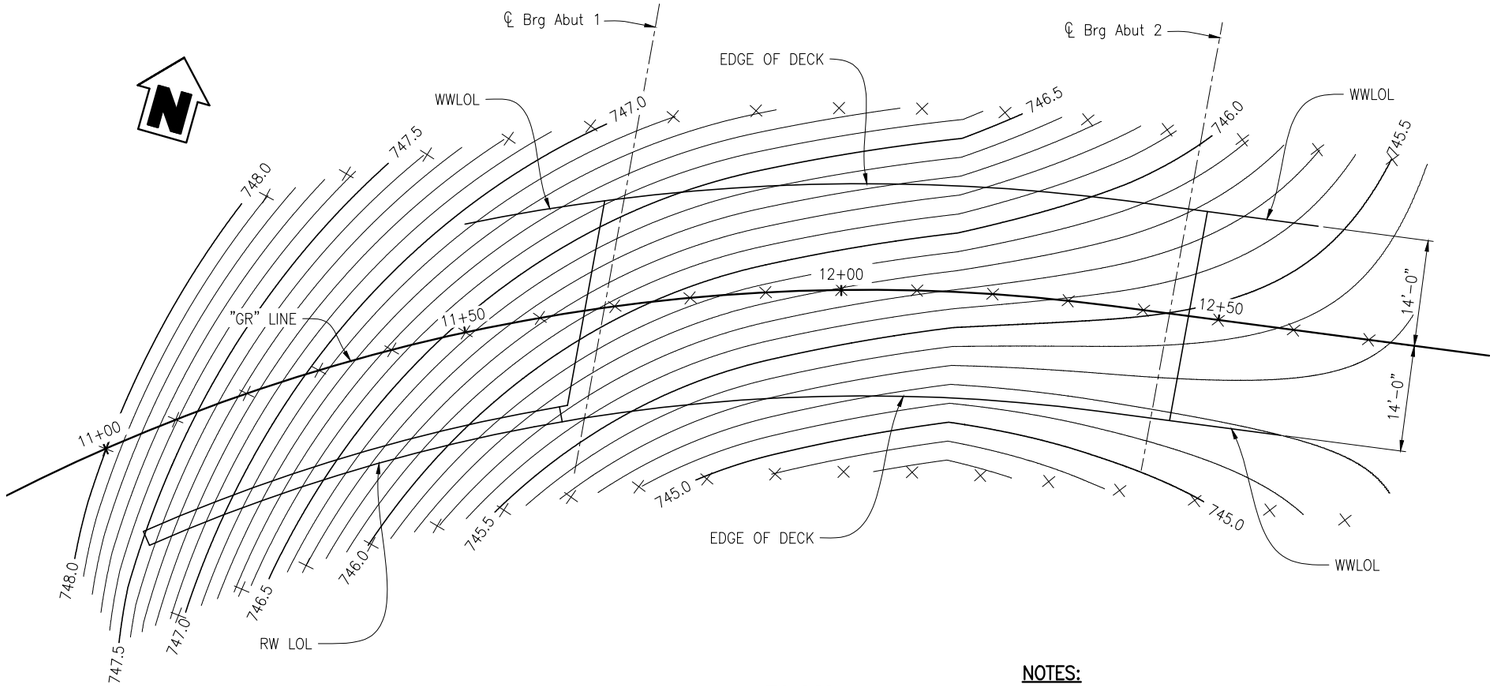

PLAN

1"=10'

NOTES:

1. Contours do not include camber.
2. Contour intervals = 0.1'.

× Denotes 10' intervals along station line

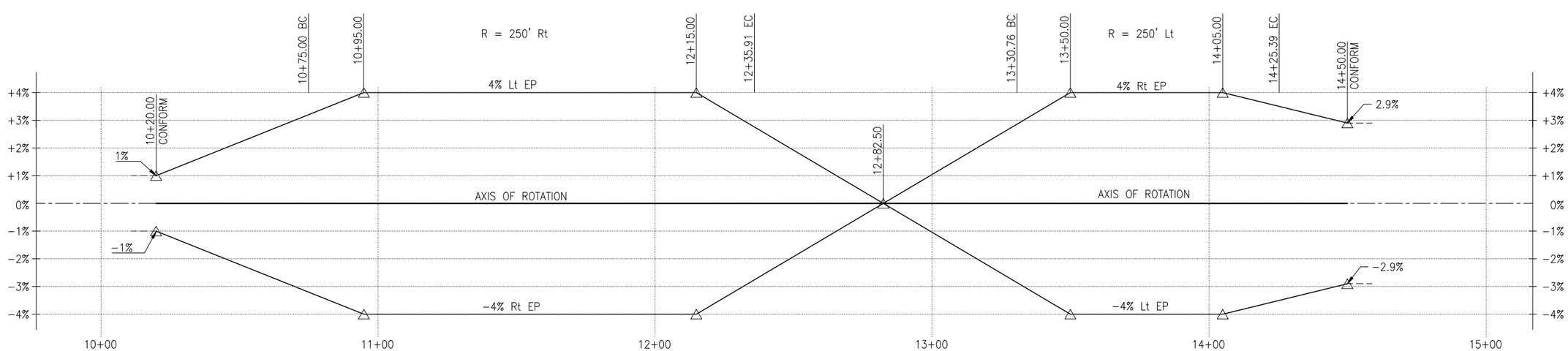

SUPERELEVATION DIAGRAM

NO SCALE

B-3

DESIGN BY	T. ARCAYA	REGISTERED CIVIL ENGINEER	CONSTRUCTION COMPLETED:	TRC 10680 White Rock Rd., Suite 100 Rancho Cordova, California 95670	COUNTY OF SONOMA DEPARTMENT OF TRANSPORTATION & PUBLIC WORKS JOHANNES HOEVERTSZ, P.E., DIRECTOR	DECK CONTOURS
DRAWING BY	G. IMBSEN	January 24, 2025 PLANS APPROVAL DATE	"AS BUILT" INFORMATION TO BE COMPLETED AFTER CONSTRUCTION RESIDENT ENGINEER AS BUILT DRAWINGS BY:			GEYSERS ROAD BRIDGE OVER FRASIER CREEK REPLACEMENT PROJECT
CHECKED BY	M. FUSTOK	FILENAME: 04_20C05XX-D-DC01.DWG	DATE / REVISION / BY / APPROVED	ORIGINAL SCALE IN INCHES FOR REDUCED PLANS 0 1 2 3		

CAMERON J. PINKERTON No. 73288 Exp. 12/31/26 CIVIL — REGISTERED PROFESSIONAL ENGINEER — STATE OF CALIFORNIA

BRIDGE NUMBER	20C0600
BUDGET NUMBER	C11005
FISCAL YEAR	2024–25
SHEET NUMBER	25
TOTAL SHEETS	41

Drawing name: H:\214336 Frasier Creek – Sonoma County\Structures\04_20C05XX-d-dc01.dwg Layout Tab: DC Jan 16,2025 – 3:20pm gimbsen

PLAN

1"=10'

LEGEND:

- 24" CIDH Piling
- 48" CIDH Piling
- XXX.X Bottom of Abut Pile Cap
- Direction of Water Flow

SCOUR DATA TABLE

LOCATION	LONG TERM (DEGRADATION AND CONTRACTION) SCOUR ELEVATION (ft)	SHORT TERM (LOCAL) SCOUR DEPTH (ft)
Abut 1	724.6	7.8
Abut 2	724.6	7.8

PILE DATA TABLE

LOCATION	PILE TYPE	CUT-OFF Elev (ft)	NOMINAL RESISTANCE (kips)		DESIGN TIP Elev (ft)	SPECIFIED TIP Elev (ft)
			COMPRESSION	TENSION		
Abut 1	48" CIDH	731.25	850	0	676.00(a), 681.25(d)	676.00
Abut 2	48" CIDH	733.25	800	0	683.00(a), 687.25(d)	683.00

HYDROLOGIC SUMMARY

Drainage Area: 6.25 Square Miles

	Design Flood	Base Flood	Overtopping Flood	Flood of Record
Frequency (Years)	50	100	>100	N/A
Discharge (Cubic feet per second)	1,385	1,670	N/A	N/A
Water Surface (Elevation at Bridge)	737.6	738.9	N/A	N/A

Flood plain data are based upon information available when the plans were prepared and are shown to meet Federal requirements. The accuracy of said information is not warranted by the County, TRC or WRECO and interested or affected parties should make their own investigation.

BENCH MARK:

Elevation = 881.14' Being the top of a 4" diameter Brass Disk stamped "US Department Of Interior, US Geoloic Survey, Elev 879 Ft Above Seal Level, 14-STR, 1977" located on the top middle of the southwesterly concrete headwall of the existing Big Sulphur Creek Bridge, This elevation is on an the NAVD 1988 vertical datum as calculated from adjacent control surveys by Sonoma County Public Works. Note that the published NGVD 1929 Datum elvevation of this benchmark is 878.69' per Sonoma County Water Agency a difference of 2.45 feet, which is typical in this area.

NOTES:

1. Design Tip Elevations for Abutments are controlled by the following demands:
   (a) Compression, (b) Settlement (d) Lateral Load.
2. The specified tip elevation shall not be raised above the design tip elevations for tension, lateral, and tolerable settlement.

B-4

DESIGN BY	T. ARCAYA
DRAWING BY	G. IMBSEN
CHECKED BY	M. FUSTOK

REGISTERED CIVIL ENGINEER
January 24, 2025
PLANS APPROVAL DATE
FILENAME: 04_20C05XX-E-FPL01.DWG

REGISTERED PROFESSIONAL ENGINEER CAMERON J. PINKERTON No. 73288 Exp. 12/31/26 CIVIL STATE OF CALIFORNIA

CONSTRUCTION COMPLETED:
"AS BUILT" INFORMATION TO BE COMPLETED AFTER CONSTRUCTION
RESIDENT ENGINEER
AS BUILT DRAWINGS BY:

DATE	REVISION	BY	APPROVED

TRC 10680 White Rock Rd., Suite 100 Rancho Cordova, California 95670

ORIGINAL SCALE IN INCHES FOR REDUCED PLANS 0 1 2 3

COUNTY OF SONOMA
DEPARTMENT OF TRANSPORTATION & PUBLIC WORKS
JOHANNES HOEVERTSZ, P.E., DIRECTOR

FOUNDATION PLAN

GEYSERS ROAD BRIDGE OVER FRASIER CREEK REPLACEMENT PROJECT

BRIDGE NUMBER	20C0600
BUDGET NUMBER	C11005
FISCAL YEAR	2024-25
SHEET NUMBER	26
TOTAL SHEETS	41

Drawing name: H:\214336 Frasier Creek - Sonoma County\Structures\04_20C05XX-e-fpl01.dwg Layout Tab: FP Jan 16,2025 - 3:22pm gimbsen

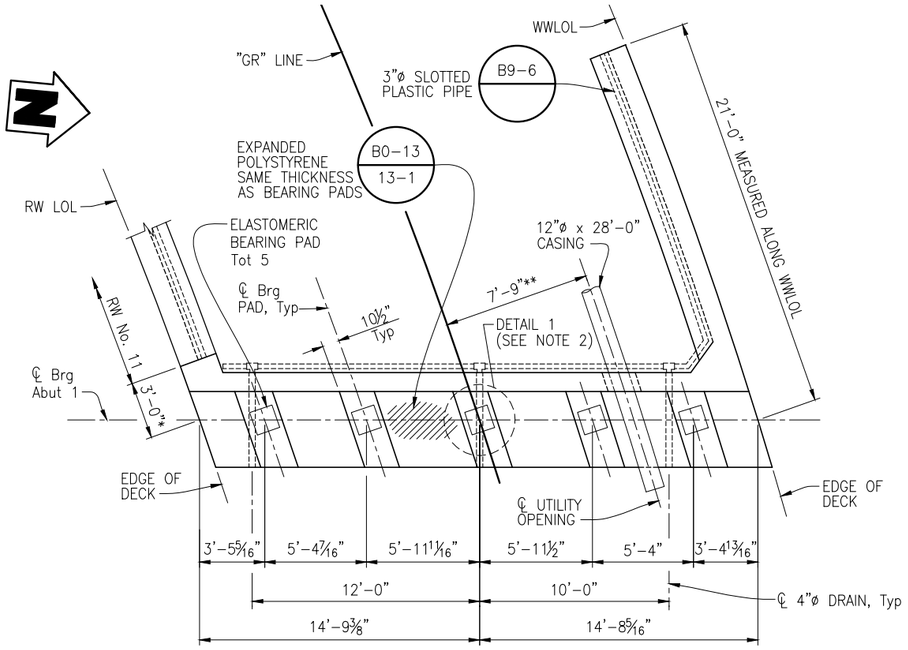

*Measured along RW LOL

** Measured perpendicular to "GR" Line

PLAN

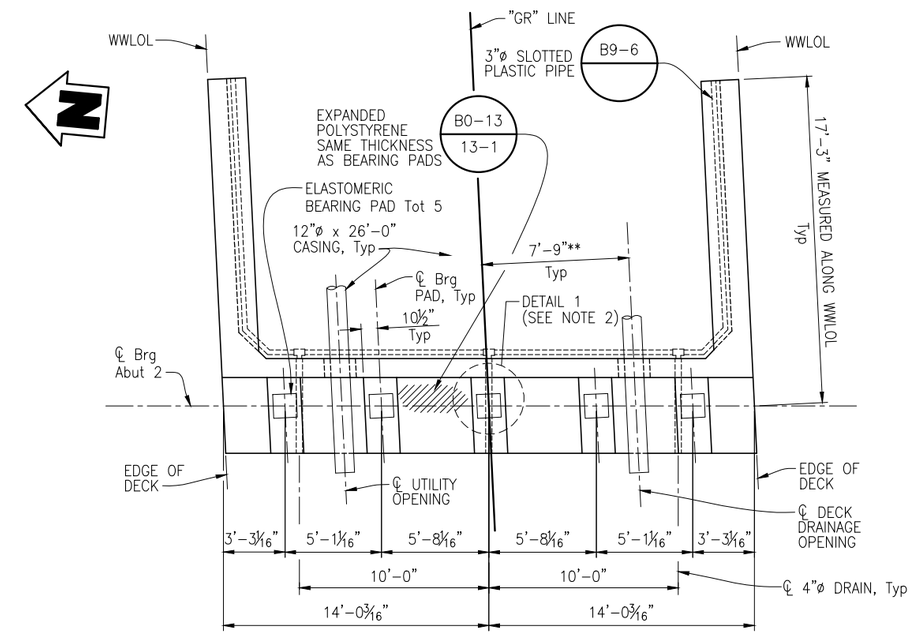

PLAN

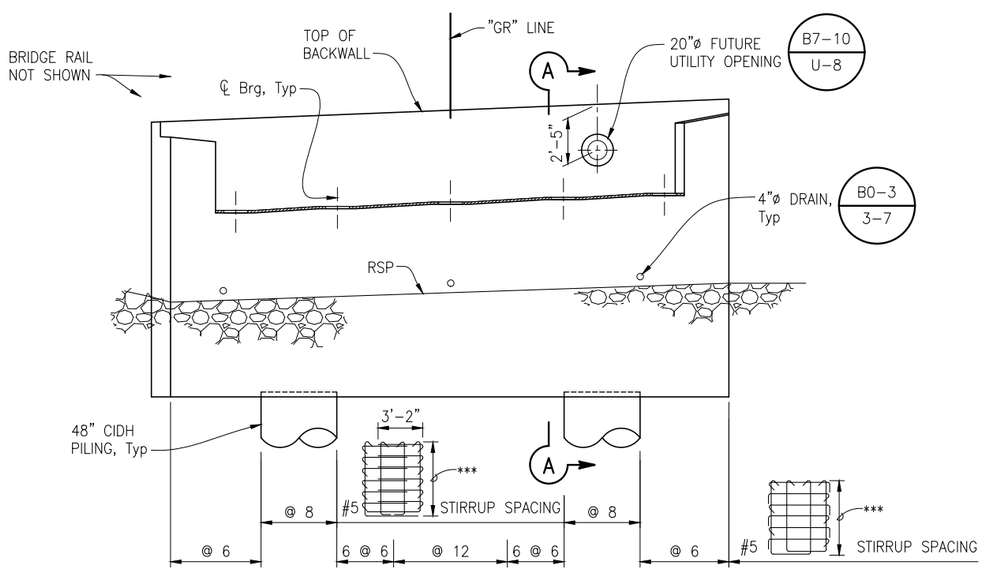

ELEVATION

ABUTMENT 1

1/4"=1'-0"

*** Varies, (See Note 4)

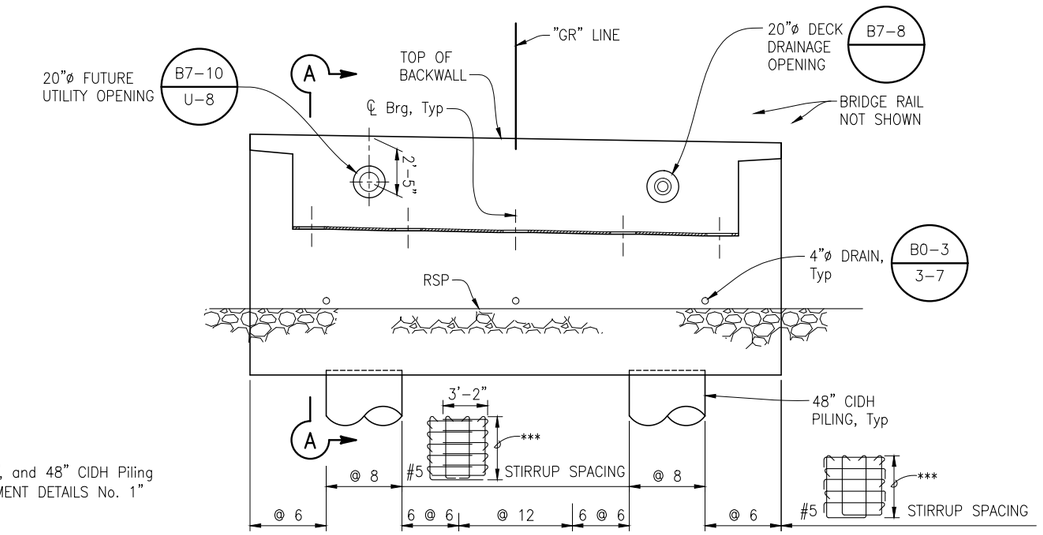

ELEVATION

ABUTMENT 2

1/4"=1'-0"

NOTES:

1. For "SECTION A–A", and 48" CIDH Piling details, see "ABUTMENT DETAILS No. 1" sheet.
2. For "DETAIL 1" see "ABUTMENT DETAILS No. 3" sheet.
3. Structure Excavation (Type D) at Abut 1 and 2.
4. Contractor may slope the bottom of pile cap to match seat slope and adjust pile cut–off so stirrups are constant height.

B-5

DESIGN BY	T. ARCAYA
DRAWING BY	A. CARDOZA
CHECKED BY	M. FUSTOK

REGISTERED CIVIL ENGINEER
January 24, 2025
PLANS APPROVAL DATE
FILENAME: 04_20C05XX–F–A01_LO1.DWG

REGISTERED PROFESSIONAL ENGINEER CAMERON J. PINKERTON No. 73288 Exp. 12/31/26 CIVIL STATE OF CALIFORNIA

CONSTRUCTION COMPLETED:
"AS BUILT" INFORMATION TO BE COMPLETED AFTER CONSTRUCTION
RESIDENT ENGINEER AS BUILT DRAWINGS BY:

DATE	REVISION	BY	APPROVED

TRC 10680 White Rock Rd., Suite 100 Rancho Cordova, California 95670

ORIGINAL SCALE IN INCHES FOR REDUCED PLANS 0 1 2 3

COUNTY OF SONOMA
DEPARTMENT OF TRANSPORTATION & PUBLIC WORKS
JOHANNES HOEVERTSZ, P.E., DIRECTOR

ABUTMENT LAYOUT

GEYSERS ROAD BRIDGE OVER FRASIER CREEK REPLACEMENT PROJECT

BRIDGE NUMBER	20C0600
BUDGET NUMBER	C11005
FISCAL YEAR	2024–25
SHEET NUMBER	27
TOTAL SHEETS	41

Drawing name: H:\214336 Frasier Creek – Sonoma County\Structures\04_20C05XX–F–a01_lo1.dwg Layout Tab: PLAN & ELEV Jan 16,2025 – 3:23pm gimbsen

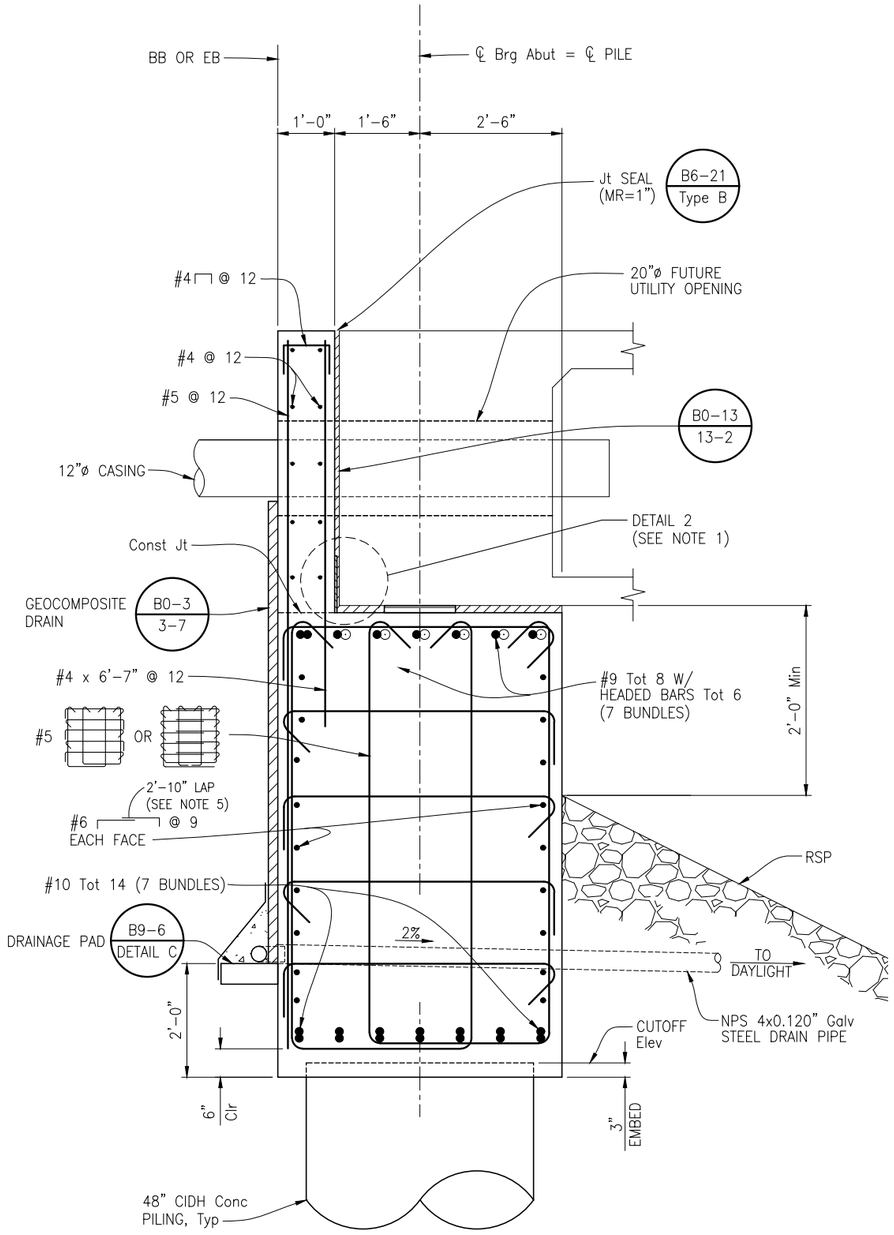

SECTION A-A

3/4"=1'-0"

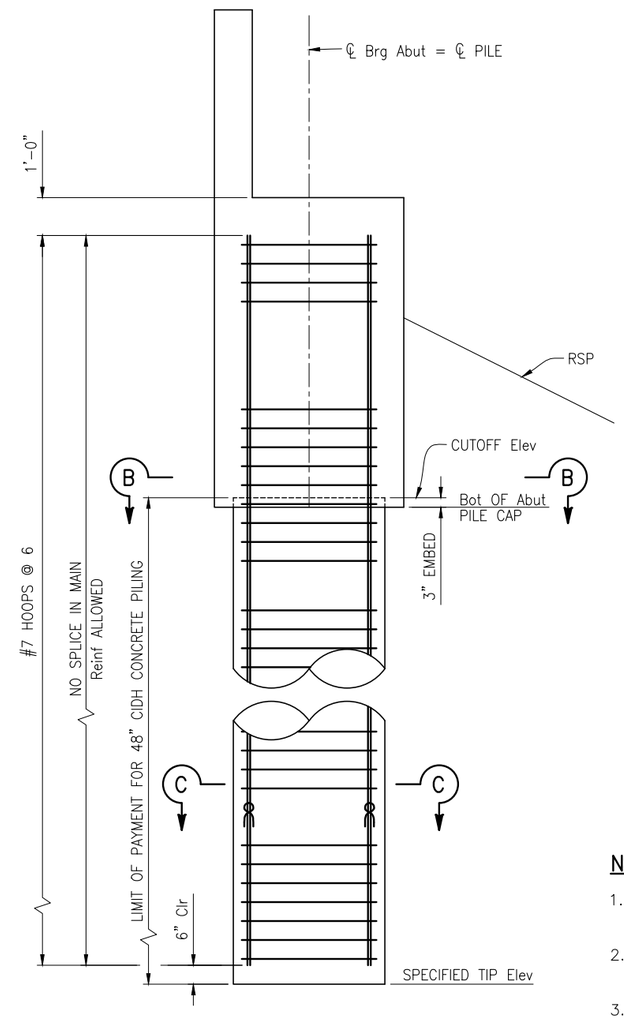

48" CIDH CONCRETE PILING DETAIL

1/2"=1'-0"

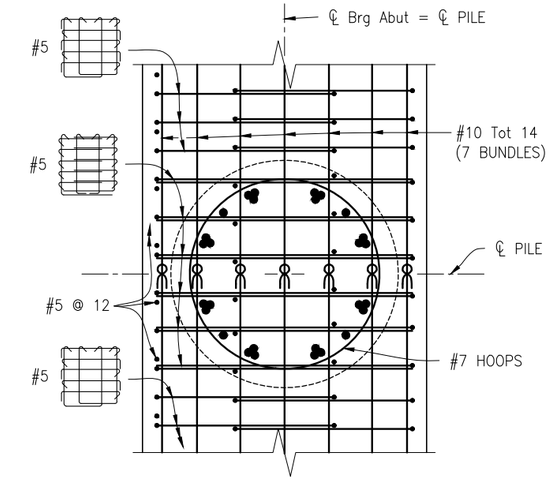

SEE SECTION C-C FOR VERTICAL PILE Reinf

SECTION B-B

3/4"=1'-0"

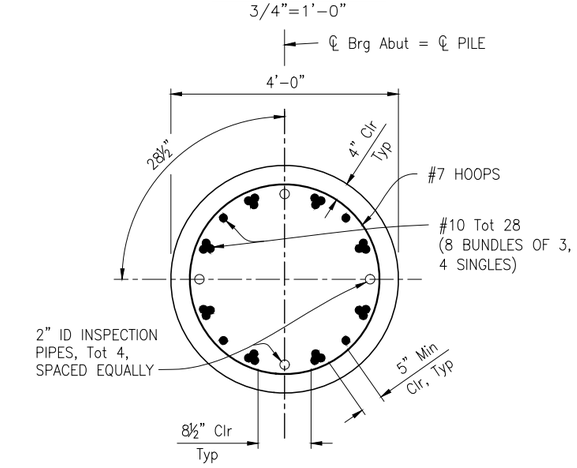

SECTION C-C

3/4"=1'-0"

NOTES:

1. For "DETAIL 2" see "ABUTMENT DETAILS No. 3" sheet.
2. All hoops to be ultimate butt spliced continuous.
3. See "PILE DATA TABLE" on "FOUNDATION PLAN" sheet for cut-off and specified tip elevations.
4. Backfill within 6" of the abutment seat elevation prior to constructing the superstructure.
5. Stagger adjacent splices.

LEGEND:

- Bundled Bars
- Headed Bar

B-6

DESIGN BY	T. ARCAYA
DRAWING BY	A. CARDOZA
CHECKED BY	M. FUSTOK

REGISTERED CIVIL ENGINEER

January 24, 2025

PLANS APPROVAL DATE

FILENAME: 04_20C05XX-F-A02_LO1.DWG

REGISTERED PROFESSIONAL ENGINEER CAMERON J. PINKERTON No. 73288 Exp. 12/31/26 CIVIL STATE OF CALIFORNIA

CONSTRUCTION COMPLETED:

"AS BUILT" INFORMATION TO BE COMPLETED AFTER CONSTRUCTION

RESIDENT ENGINEER AS BUILT DRAWINGS BY:

DATE	REVISION	BY	APPROVED

TRC 10680 White Rock Rd., Suite 100 Rancho Cordova, California 95670

ORIGINAL SCALE IN INCHES FOR REDUCED PLANS 0 1 2 3

COUNTY OF SONOMA
DEPARTMENT OF TRANSPORTATION & PUBLIC WORKS
JOHANNES HOEVERTSZ, P.E., DIRECTOR

ABUTMENT DETAILS No. 1

GEYSERS ROAD BRIDGE OVER FRASIER CREEK REPLACEMENT PROJECT

BRIDGE NUMBER	20C0600
BUDGET NUMBER	C11005
FISCAL YEAR	2024-25
SHEET NUMBER	28
TOTAL SHEETS	41

Drawing name: H:\214336 Frasier Creek - Sonoma County\Structures\04_20C05XX-F-a02_lo1.dwg Layout Tab: PLAN & ELEV Jan 16,2025 - 3:27pm gimbsen

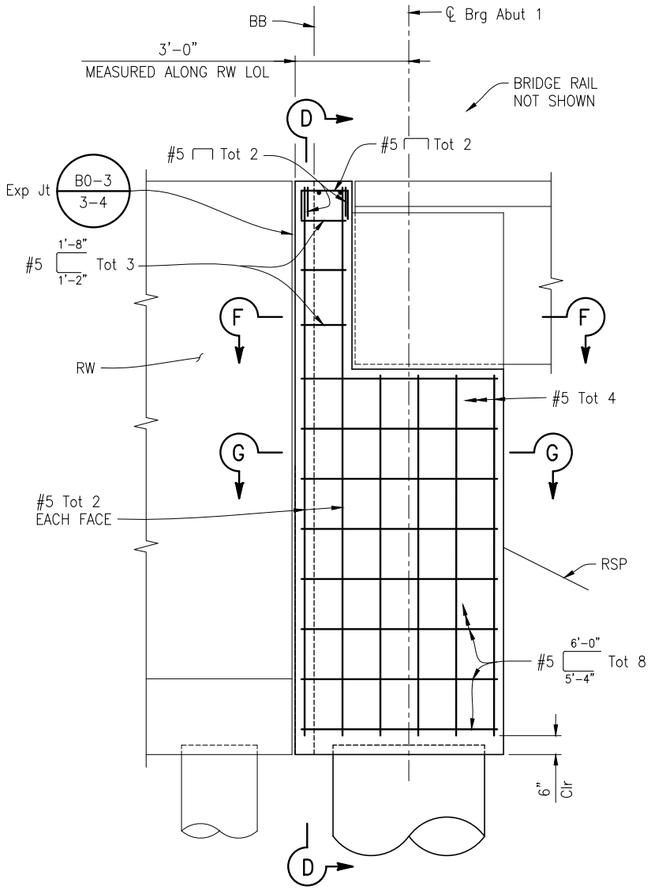

ABUTMENT 1 SOUTH

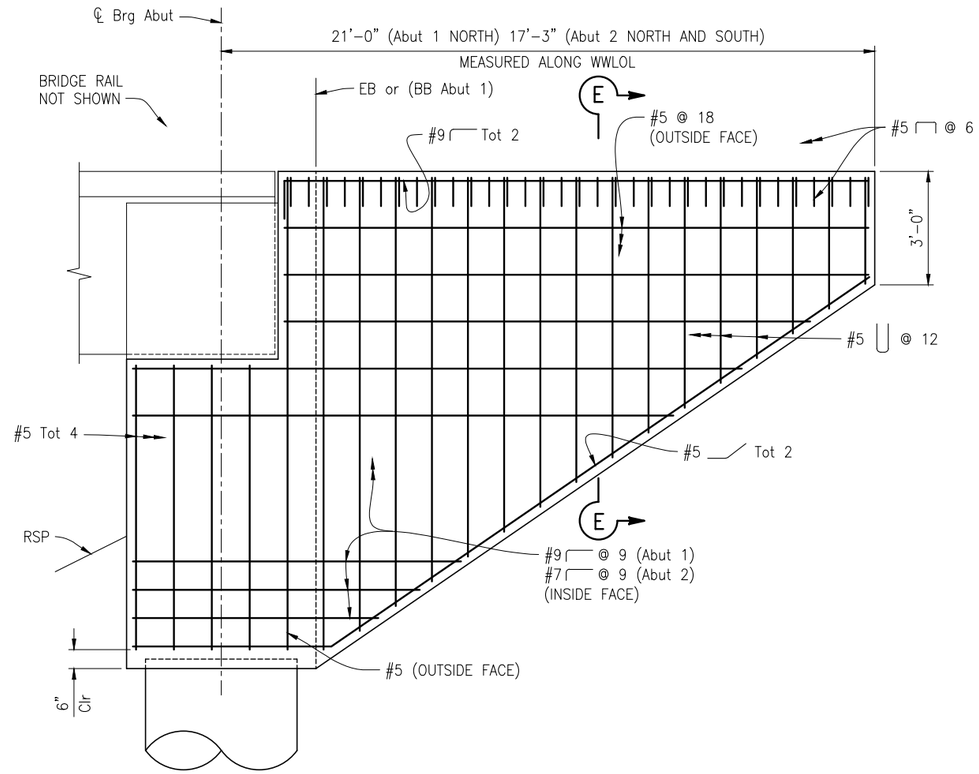

ABUTMENT 1 AND 2 NORTH SIMILAR

ABUTMENT 2 SOUTH

WINGWALL ELEVATIONS

1/2"=1'-0"

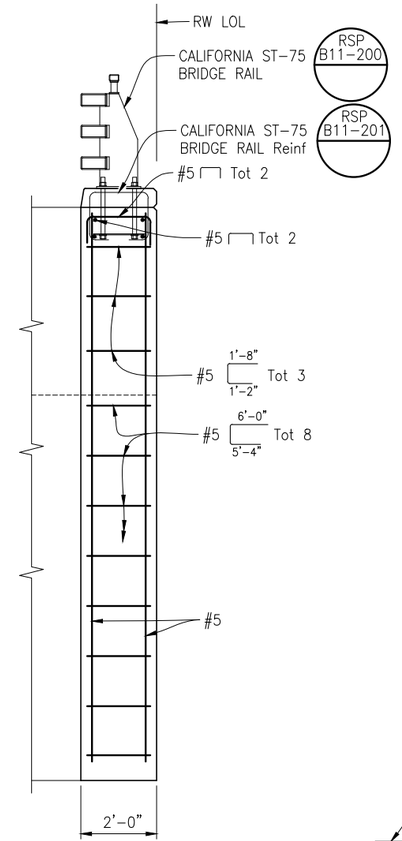

SECTION D-D

1/2"=1'-0"

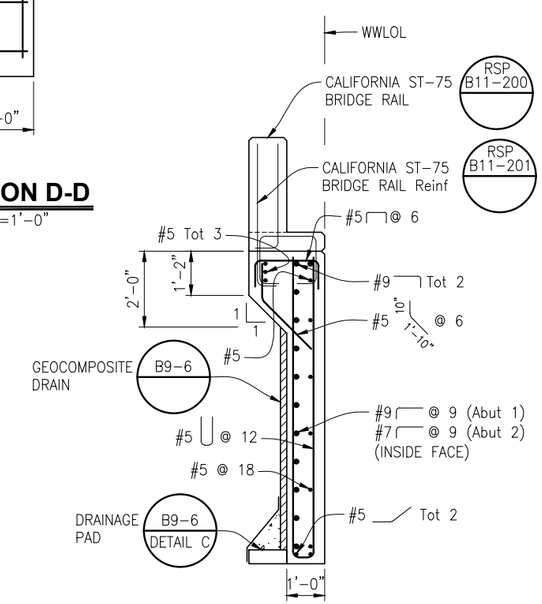

SECTION E-E

1/2"=1'-0"

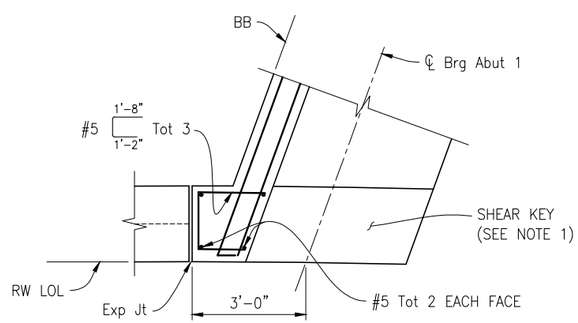

SECTION F-F

1/2"=1'-0"

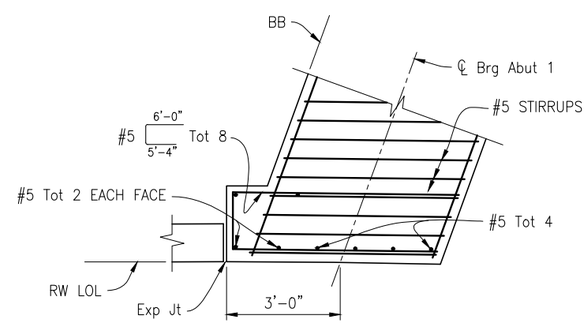

SECTION G-G

1/2"=1'-0"

NOTES:

1. For "SHEAR KEY DETAILS", see "ABUTMENT DETAILS No. 3" sheet.

B-7

DESIGN BY	T. ARCAYA	REGISTERED CIVIL ENGINEER	CONSTRUCTION COMPLETED: "AS BUILT" INFORMATION TO BE COMPLETED AFTER CONSTRUCTION	TRC 10680 White Rock Rd., Suite 100 Rancho Cordova, California 95670	COUNTY OF SONOMA DEPARTMENT OF TRANSPORTATION & PUBLIC WORKS JOHANNES HOEVERTSZ, P.E., DIRECTOR	ABUTMENT DETAILS No. 2	BRIDGE NUMBER 20C0600
DRAWING BY	G. IMBSEN	January 24, 2025	RESIDENT ENGINEER AS BUILT DRAWINGS BY:			GEYSERS ROAD BRIDGE OVER FRASIER CREEK REPLACEMENT PROJECT	BUDGET NUMBER C11005
CHECKED BY	M. FUSTOK	PLANS APPROVAL DATE	DATE / REVISION / BY / APPROVED	ORIGINAL SCALE IN INCHES FOR REDUCED PLANS 0 1 2 3			FISCAL YEAR 2024-25
		FILENAME: 04_20C05XX-F-A02-DT01.DWG					SHEET NUMBER 29
							TOTAL SHEETS 41

REGISTERED PROFESSIONAL ENGINEER CAMERON J. PINKERTON No. 73288 Exp. 12/31/26 CIVIL STATE OF CALIFORNIA

Drawing name: H:\214336 Frasier Creek - Sonoma County\Structures\04_20C05XX-F-a02-dt01.dwg Layout Tab: Abut DT 1 Jan 16,2025 - 3:28pm gimbsen

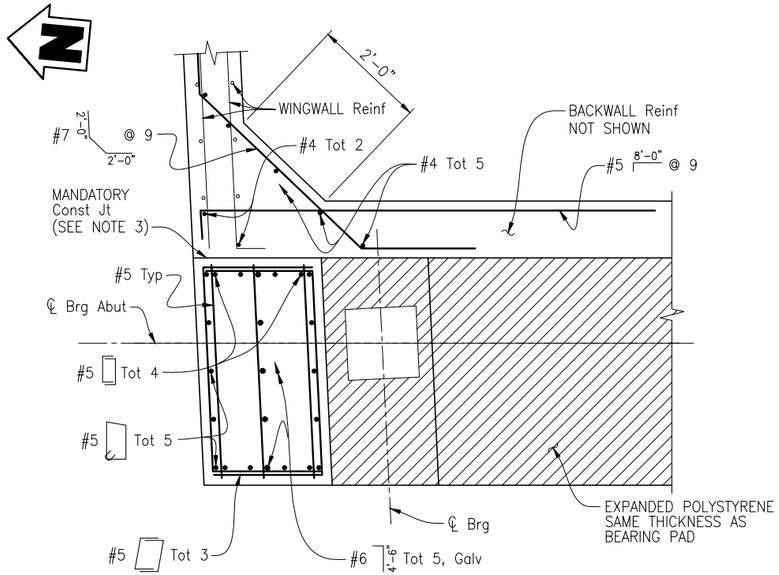

PLAN

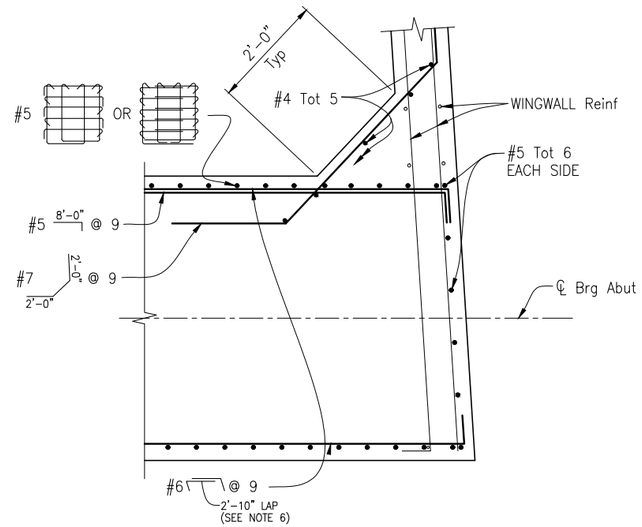

ABUTMENT 2 SHOWN ABUTMENT 1 SIMILAR

CORNER DETAIL

3/4"=1'-0"

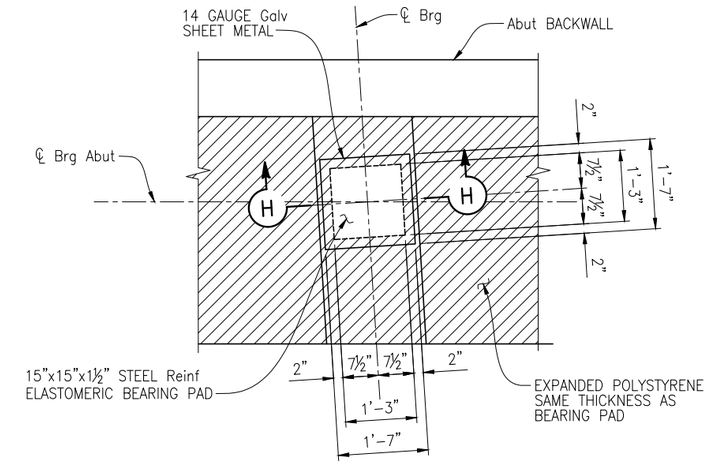

DETAIL 1

3/4"=1'-0"

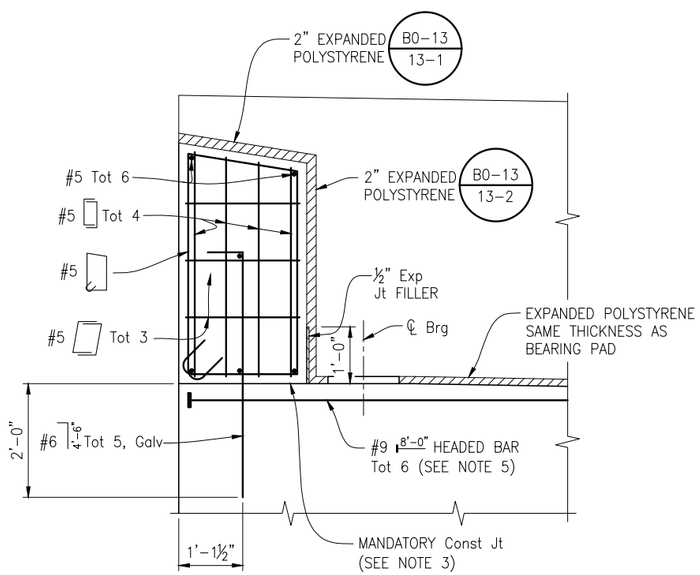

ELEVATION

ABUTMENT 2 SHOWN ABUTMENT 1 SIMILAR

SHEAR KEY DETAILS

3/4"=1'-0"

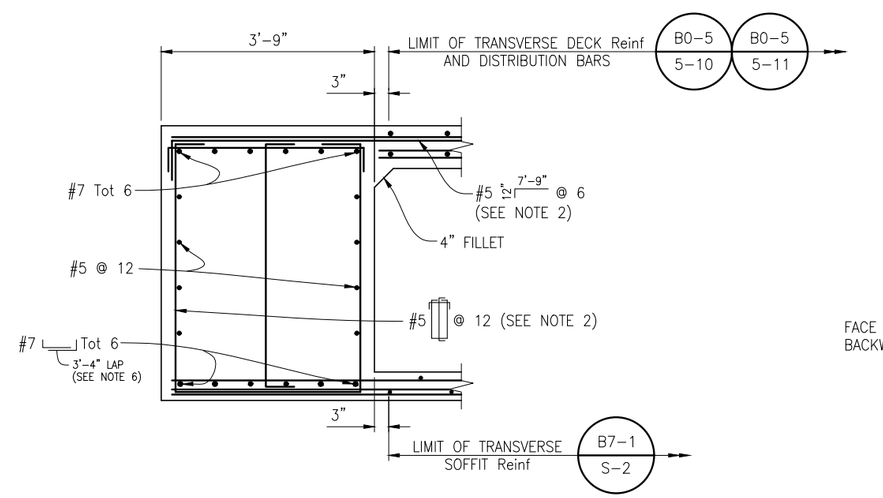

END DIAPHRAGM

3/4"=1'-0"

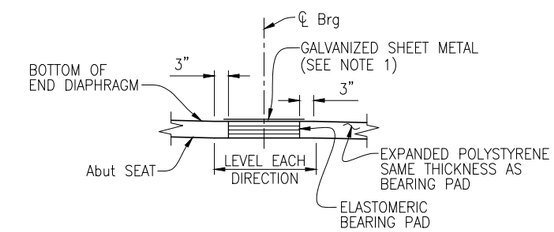

SECTION H-H

3/4"=1'-0"

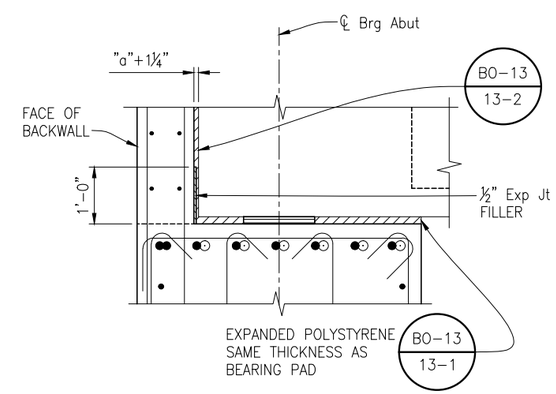

DETAIL 2

3/4"=1'-0"

NOTES:

1. Place 19"x19"x0.079" galvanized sheet metal centered over Elastomeric Bearing pads. Coat top of pad with silicone grease, epoxy bond pad to abutment.
2. Place parallel to girders and space normal to centerline of girders.
3. Mandatory construction joint must be smooth finished and lined with 15 pound construction paper.
4. Shear key must be poured separate from abutment seat and backwall.
5. For location of abutment hanger bars, see "SECTION A–A" on "ABUTMENT DETAILS No. 1" sheet.
6. Stagger adjacent splices.

B-8

DESIGN BY	T. ARCAYA	REGISTERED CIVIL ENGINEER January 24, 2025 PLANS APPROVAL DATE	CONSTRUCTION COMPLETED: "AS BUILT" INFORMATION TO BE COMPLETED AFTER CONSTRUCTION RESIDENT ENGINEER AS BUILT DRAWINGS BY:	TRC 10680 White Rock Rd., Suite 100 Rancho Cordova, California 95670	COUNTY OF SONOMA DEPARTMENT OF TRANSPORTATION & PUBLIC WORKS JOHANNES HOEVERTSZ, P.E., DIRECTOR	ABUTMENT DETAILS No. 3	BRIDGE NUMBER 20C0600
DRAWING BY	A. CARDOZA					GEYSERS ROAD BRIDGE OVER FRASIER CREEK REPLACEMENT PROJECT	BUDGET NUMBER C11005
CHECKED BY	M. FUSTOK	FILENAME: 04_20C05XX-F-A02-DT02.DWG	DATE / REVISION / BY / APPROVED	ORIGINAL SCALE IN INCHES FOR REDUCED PLANS 0 1 2 3			FISCAL YEAR 2024-25
							SHEET NUMBER 30
							TOTAL SHEETS 41

Drawing name: H:\214336 Frasier Creek – Sonoma County\Structures\04_20C05XX-F-a02-dt02.dwg Layout Tab: Abut DT 2 Jan 16,2025 – 3:29pm gimbsen

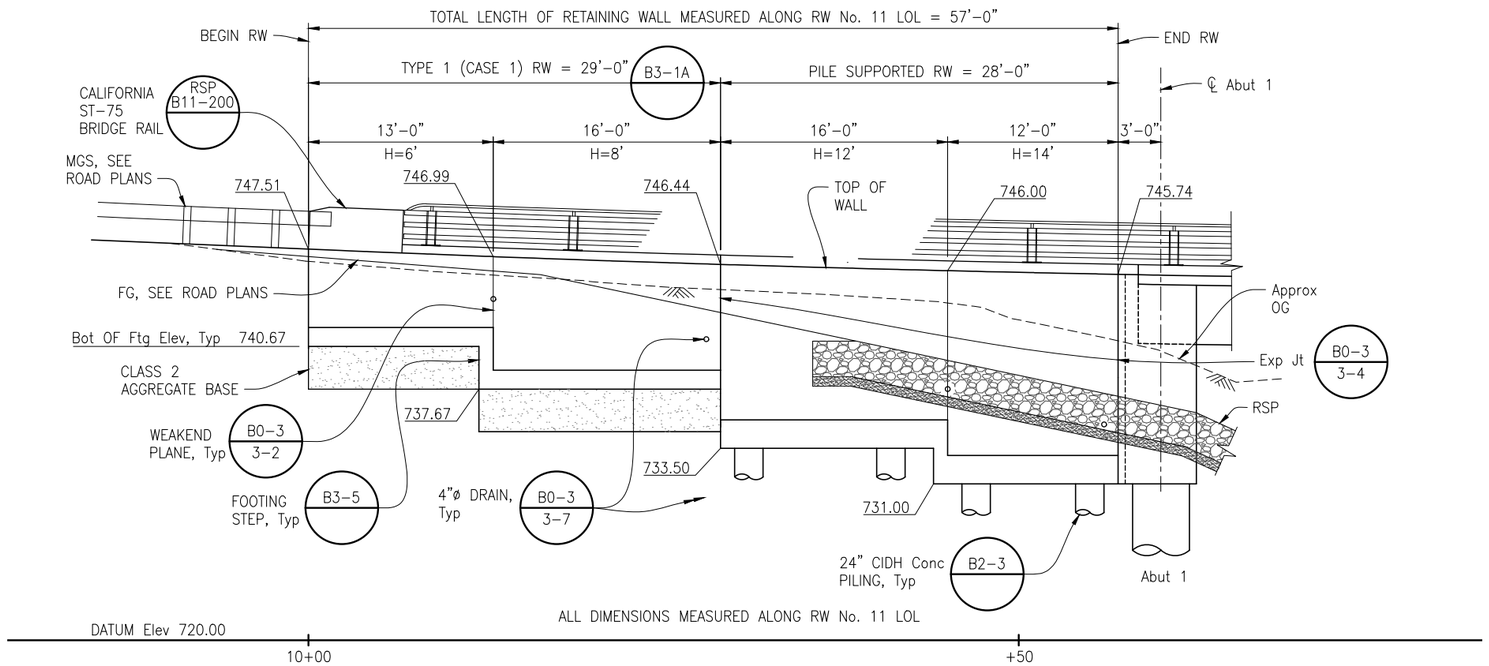

DEVELOPED ELEVATION

3/16"=1'-0"

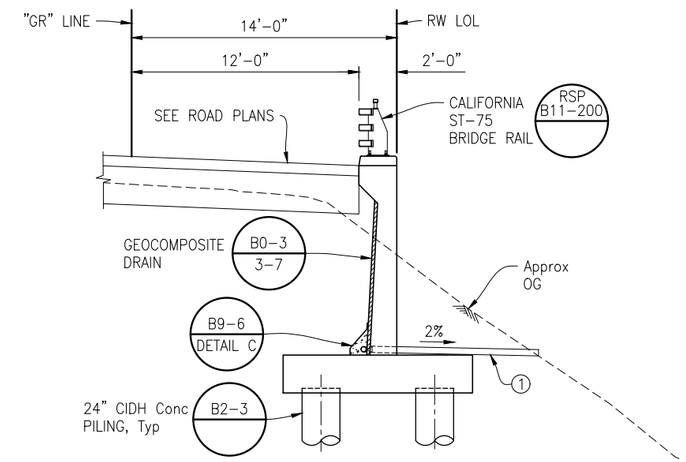

PILE SUPPORTED RW

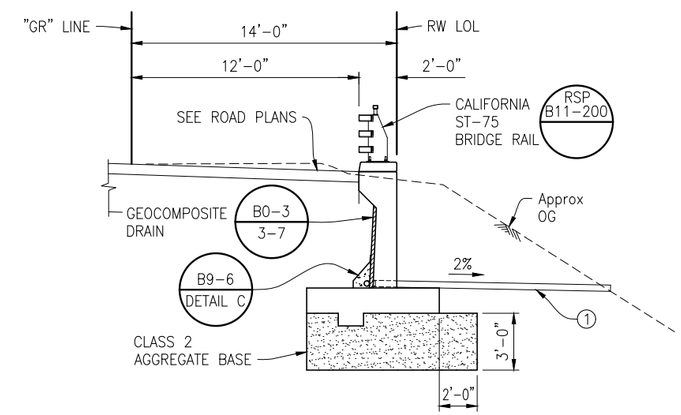

TYPE 1 (CASE 1) RW

TYPICAL SECTIONS

1/4"=1'-0"

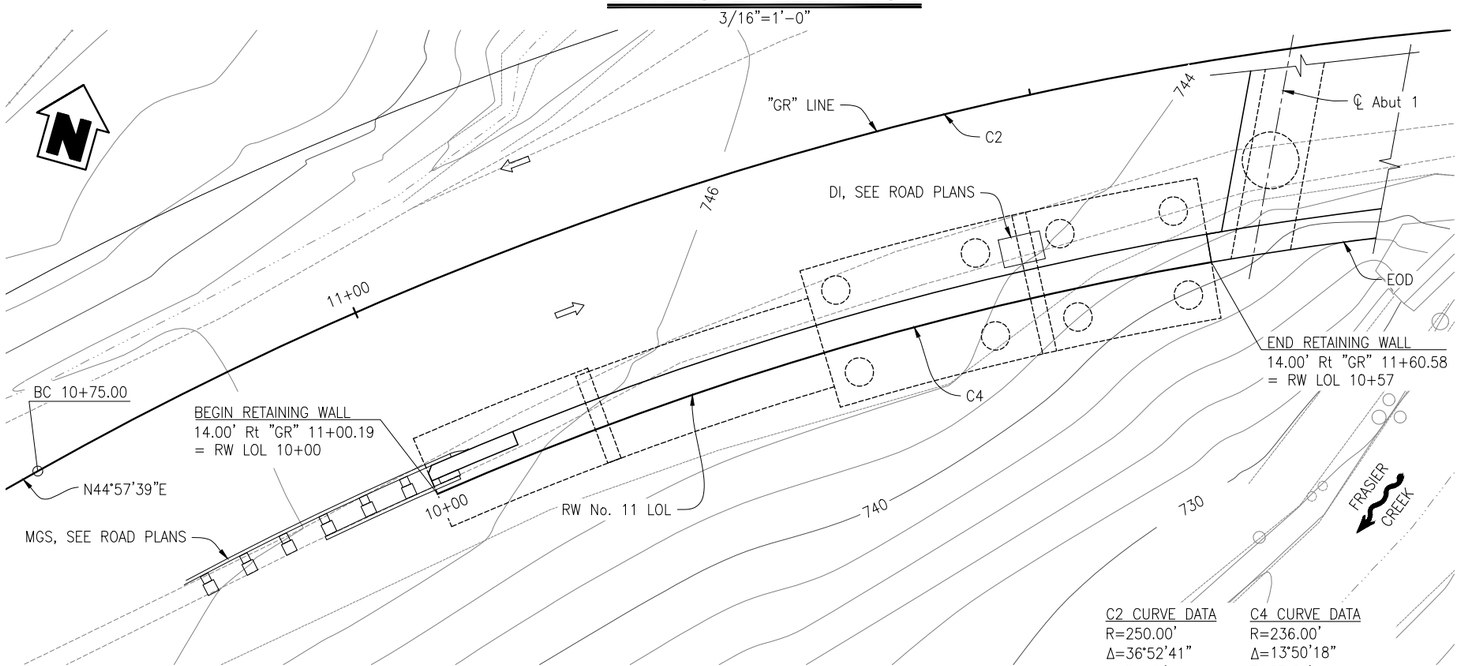

PLAN

3/16"=1'-0"

C2 CURVE DATA	C4 CURVE DATA
R=250.00'	R=236.00'
Δ=36°52'41"	Δ=13°50'18"
T=83.35'	T=28.64'
L=160.91'	L=57.00'

SPREAD FOOTING DATA TABLE

ERS "RW" LINE STATION INTERVAL (ft)	DESIGN HEIGHT (ft)	SERVICE PERMISSIBLE NET CONTACT STRESS (SETTLEMENT) (ksf)	STRENGTH/CONSTRUCTION FACTORED GROSS NOMINAL BEARING RESISTANCE (ϕ_b=0.55) (ksf)	EXTREME EVENT FACTORED GROSS NOMINAL BEARING RESISTANCE (ϕ_b=0.80) (ksf)
10+00 TO 10+13	6.0	2.5	3.9	4.2
10+13 TO 10+29	8.0	2.7	3.2	4.3

NOTES:

1. Structure Excavation (Type D) at RW No. 11.

(1) NPS 4x0.120" Galv steel drain pipe to daylight

LEGEND:

Indicates Direction of Flow

Indicates Direction of Traffic

B-9

DESIGN BY	T. ARCAYA	REGISTERED CIVIL ENGINEER January 24, 2025 PLANS APPROVAL DATE	CONSTRUCTION COMPLETED: "AS BUILT" INFORMATION TO BE COMPLETED AFTER CONSTRUCTION RESIDENT ENGINEER AS BUILT DRAWINGS BY:	TRC 10680 White Rock Rd., Suite 100 Rancho Cordova, California 95670	COUNTY OF SONOMA DEPARTMENT OF TRANSPORTATION & PUBLIC WORKS JOHANNES HOEVERTSZ, P.E., DIRECTOR
DRAWING BY	G. IMBSEN				RETAINING WALL LAYOUT
CHECKED BY	M. FUSTOK	FILENAME: 04_20C05XX-G-RW_L001.DWG	DATE / REVISION / BY / APPROVED	ORIGINAL SCALE IN INCHES FOR REDUCED PLANS 0 1 2 3	GEYSERS ROAD BRIDGE OVER FRASIER CREEK REPLACEMENT PROJECT

BRIDGE NUMBER	20C0600
BUDGET NUMBER	C11005
FISCAL YEAR	2024-25
SHEET NUMBER	31
TOTAL SHEETS	41

Drawing name: H:\214336 Frasier Creek - Sonoma County\Structures\04_20C05XX-g-rw_lo01.dwg Layout Tab: RW 11 LO Jan 16,2025 - 3:36pm gimbsen

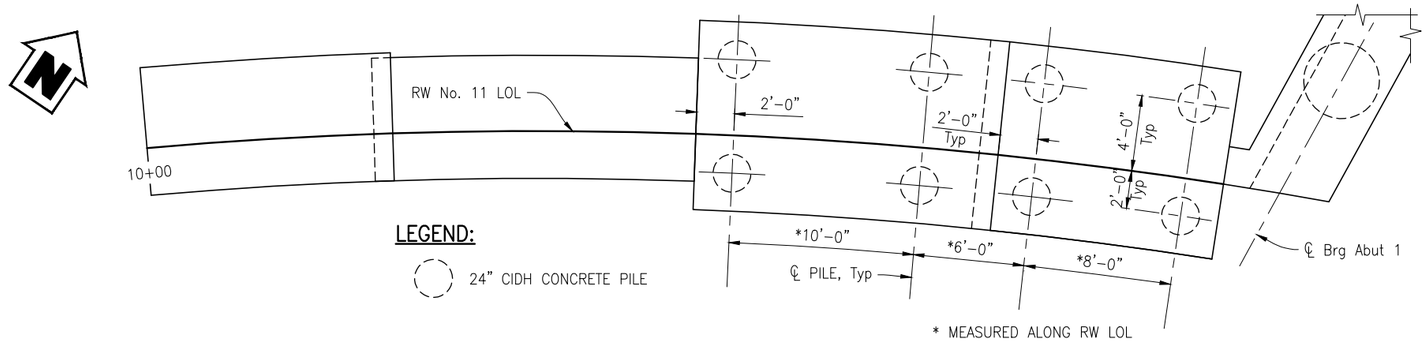

PILE FOOTING PLAN

1/4"=1'-0"

RW PILE DATA TABLE

LOCATION	PILE TYPE	CUT-OFF Elev (ft)	NOMINAL RESISTANCE (kips)		DESIGN TIP Elev (ft)	SPECIFIED TIP Elev (ft)
			COMPRESSION	TENSION		
RWLOL 10+29 – 10+45	24" CIDH	733.75	150	0	701.0(a), 716.5(d)	701.0
RWLOL 10+45 – 10+57	24" CIDH	731.25	140	0	702.0(a), 714.0(d)	702.0

Note: Design Tip Elevations for Retaining Wall footings are controlled by the following demands:
(a) Compression, (b) Settlement (d) Lateral Load.

NOTES:

1. All piles are 24" CIDH Concrete piling, see B2-3 with inspection tubes.
2. Minimum distance between center of pile and edge of footing is 2'-0".
3. For details not shown and drainage notes, see B3-5
4. Footing soil cover, 2'-0" Min.
5. Provide #6 @ 10x15'-0" ⓖ bars over a distance of 8'-0" measured from all expansion joints, begin wall and end wall locations. For H≤14', hook ⓖ bars into footing and reduce bar length as needed to maintain minimum clear cover.
6. No splices are allowed within H/4 above the top of footing.

TABLE OF REINFORCING STEEL DIMENSIONS AND DATA

DESIGN H	12'	14'
W	10'-0"	10'-0"
C	4'-0"	4'-0"
B	6'-0"	6'-0"
F PILE FOOTING	2'-0"	2'-0"
M	2'-0"	2'-0"
N	4'-0"	4'-0"
Batter	½ : 12	½ : 12
ⓑ bars	#7 @ 9	#8 @ 9
ⓒ bars	#5 @ 9	#5 @ 9
ⓓ bars	#7 @ 9	#7 @ 9
ⓔ bars	10-#5 @ 12	10-#5 @ 12
ⓕ bars	10-#5 @ 12	10-#5 @ 12

NOTE: ⓔ bars and ⓕ bars shown are total number of top and bottom bars combined.

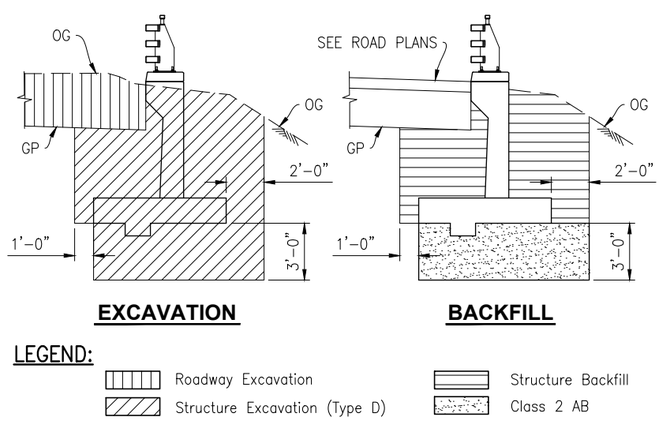

EXCAVATION AND BACKFILL - RW TYPE 1 (CASE 1)

NO SCALE

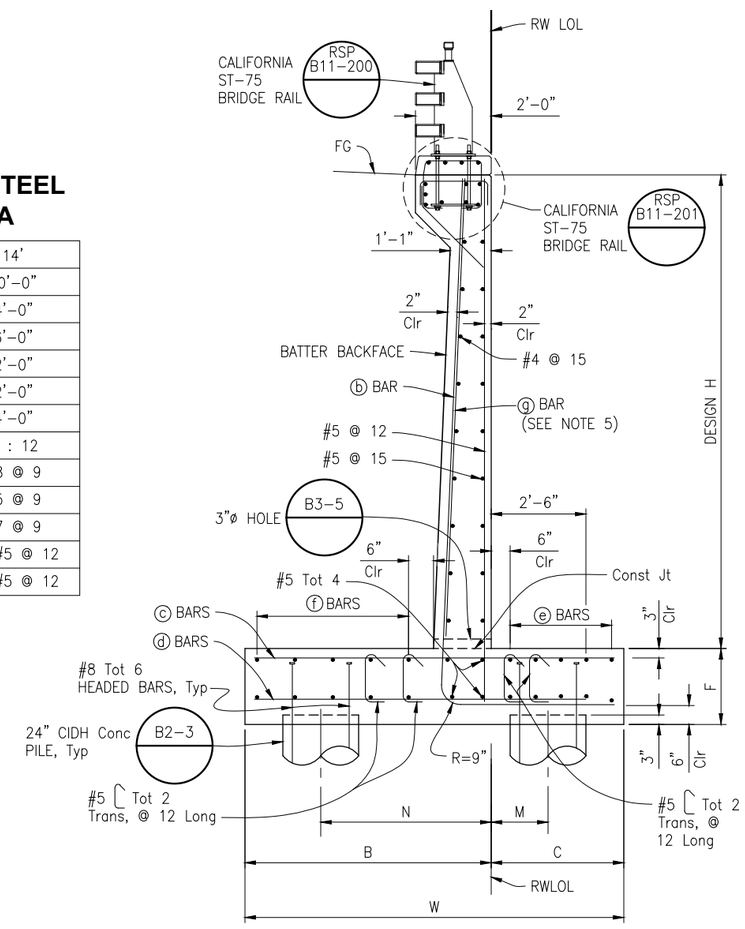

PILE FOOTING SECTION

NO SCALE

DESIGN DATA

Design: AASHTO LRFD Bridge Design Specifications 8th edition with California Amendments preface dated April 2019.

LS: 2' surcharge on level ground surface

CT: 27 kip transverse force applied at 32" above FS, applied as a point load and 1:1 distribution down and outward. Distribution below footing taken as no less than 40' or the full length of the wall, whichever is lesser.

EQE: Seismic earth pressure of 25 pcf
K_h = 0.29, K_v = 0.0

Soil/Backfill: ϕ = 34°, γ = 120 pcf

Soil for Base Friction: ϕ = 34°, γ = 120 pcf

Reinforced Concrete: f'c = 3600 psi, fy = 60,000 psi

Load Combinations and Limit States:

Service I: Q=1.00DC+1.00EV+1.00EH+1.00LS

Strength I: Q=αDC+βEV+1.50EH+1.75LS
Q=1.25DC+1.35EV+0.90EH+1.75LS (for piles at heel)

Extreme I: Q=1.00DC+1.00EV+1.00EH+1.00EQD+1.00EQE

Extreme II: Q=1.00DC+1.00EV+1.00EH+1.00CT

Where:

- Q: Force Effects
- α: 1.25 or 0.90, Whichever Controls Design
- β: 1.35 or 1.00, Whichever Controls Design
- DC: Dead Load of Structure Components
- EH: Horizontal Earth Pressure
- EV: Vertical Earth Fill Pressure
- LS: Live Load Surcharge
- EQE: Seismic Earth Pressure
- EQD: Soil and Structural and Nonstructural Components Inertia
- CT: Vehicular Collision Force

B-10

DESIGN BY	T. ARCAYA
DRAWING BY	G. IMBSEN
CHECKED BY	M. FUSTOK

REGISTERED CIVIL ENGINEER
January 24, 2025
PLANS APPROVAL DATE
FILENAME: 04_20C05XX-G-RWDT01.DWG

REGISTERED PROFESSIONAL ENGINEER CAMERON J. PINKERTON No. 73288 Exp. 12/31/26 CIVIL STATE OF CALIFORNIA

CONSTRUCTION COMPLETED:
"AS BUILT" INFORMATION TO BE COMPLETED AFTER CONSTRUCTION
RESIDENT ENGINEER
AS BUILT DRAWINGS BY:

DATE	REVISION	BY	APPROVED

TRC 10680 White Rock Rd., Suite 100 Rancho Cordova, California 95670

ORIGINAL SCALE IN INCHES FOR REDUCED PLANS 0 1 2 3

COUNTY OF SONOMA
DEPARTMENT OF TRANSPORTATION & PUBLIC WORKS
JOHANNES HOEVERTSZ, P.E., DIRECTOR

RETAINING WALL DETAILS

GEYSERS ROAD BRIDGE OVER FRASIER CREEK REPLACEMENT PROJECT

BRIDGE NUMBER	20C0600
BUDGET NUMBER	C11005
FISCAL YEAR	2024-25
SHEET NUMBER	32
TOTAL SHEETS	41

Drawing name: H:\214336 Frasier Creek – Sonoma County\Structures\04_20C05XX-g-rwdt01.dwg Layout Tab: RW DET Jan 16,2025 – 4:02pm gimbsen

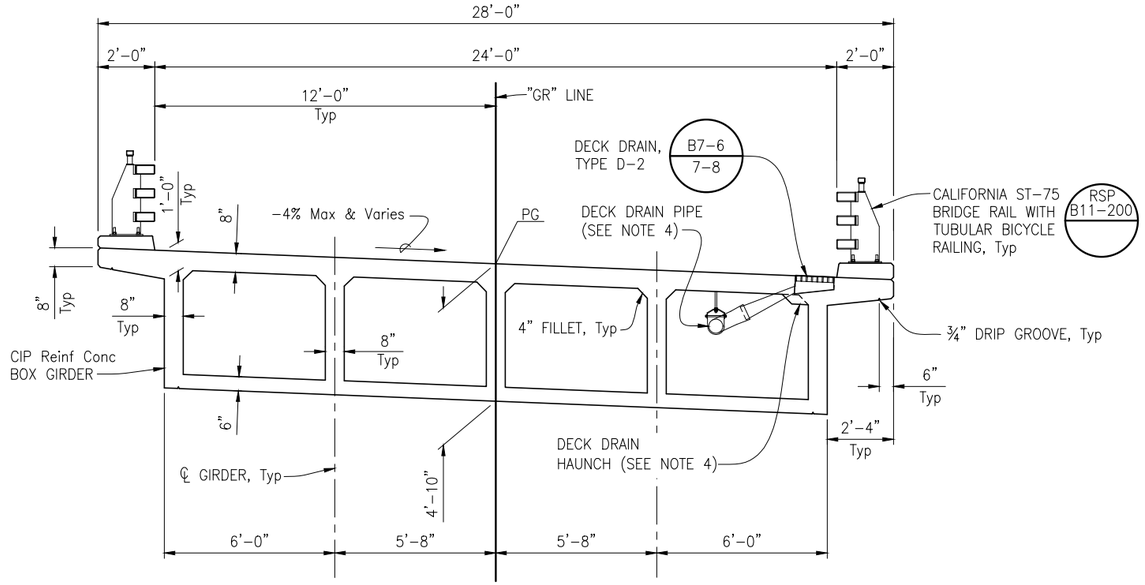

TYPICAL SECTION

3/8"=1'-0"

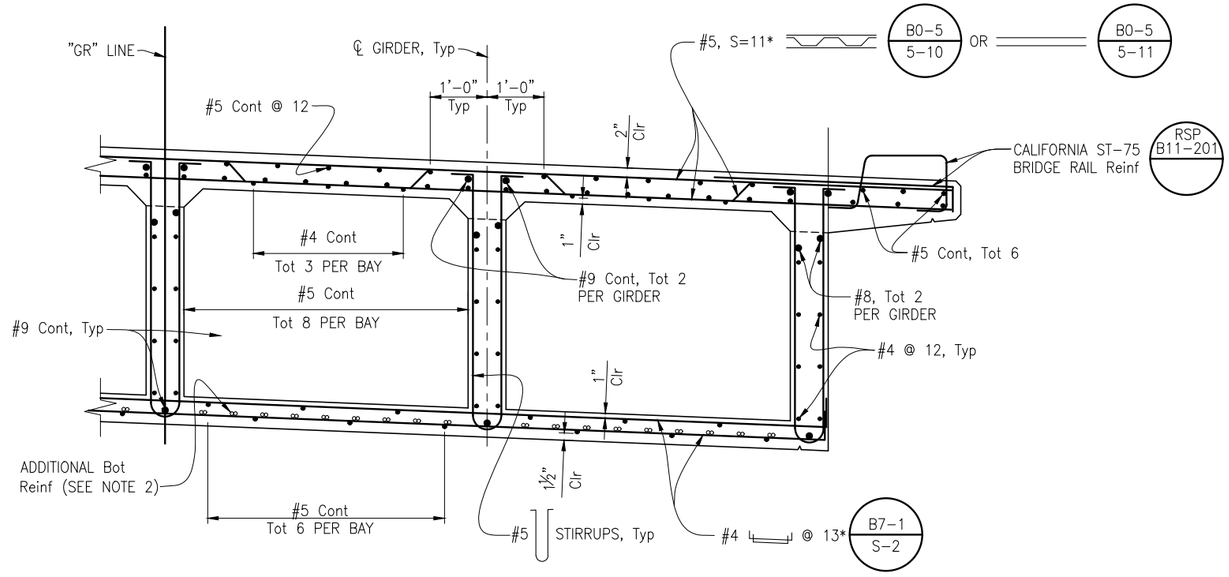

* PLACE PARALLEL TO ℄ Abut AND SPACE ALONG "GR" LINE

PART TYPICAL SECTION

B0-5 | B7-1 | RSP B11-201

3/4"=1'-0"

NOTES:

1. For stirrup placement see "GIRDER LAYOUT" sheet.
2. For Additional Bottom Reinforcement, see "GIRDER REINFORCEMENT" sheet.
3. Service Splice allowed outside of no splice zone, see "GIRDER REINFORCEMENT" sheet.
4. For deck drain locations, deck drain pipe, and deck drain haunch details, see "DECK DRAINAGE DETAILS" sheet.

B-11

DESIGN BY	T. ARCAYA
DRAWING BY	G. IMBSEN
CHECKED BY	M. FUSTOK

REGISTERED CIVIL ENGINEER
January 24, 2025
PLANS APPROVAL DATE
FILENAME: 04_20C05XX-K-TS01.DWG

REGISTERED PROFESSIONAL ENGINEER CAMERON J. PINKERTON No. 73288 Exp. 12/31/26 CIVIL STATE OF CALIFORNIA

CONSTRUCTION COMPLETED:
"AS BUILT" INFORMATION TO BE COMPLETED AFTER CONSTRUCTION
RESIDENT ENGINEER
AS BUILT DRAWINGS BY:

DATE	REVISION	BY	APPROVED

TRC 10680 White Rock Rd., Suite 100 Rancho Cordova, California 95670

ORIGINAL SCALE IN INCHES FOR REDUCED PLANS 0 1 2 3

COUNTY OF SONOMA
DEPARTMENT OF TRANSPORTATION & PUBLIC WORKS
JOHANNES HOEVERTSZ, P.E., DIRECTOR

TYPICAL SECTION

GEYSERS ROAD BRIDGE OVER FRASIER CREEK REPLACEMENT PROJECT

BRIDGE NUMBER	20C0600
BUDGET NUMBER	C11005
FISCAL YEAR	2024-25
SHEET NUMBER	33
TOTAL SHEETS	41

Drawing name: H:\214336 Frasier Creek - Sonoma County\Structures\04_20C05XX-k-ts01.dwg Layout Tab: TS Jan 16,2025 - 4:04pm gimbsen

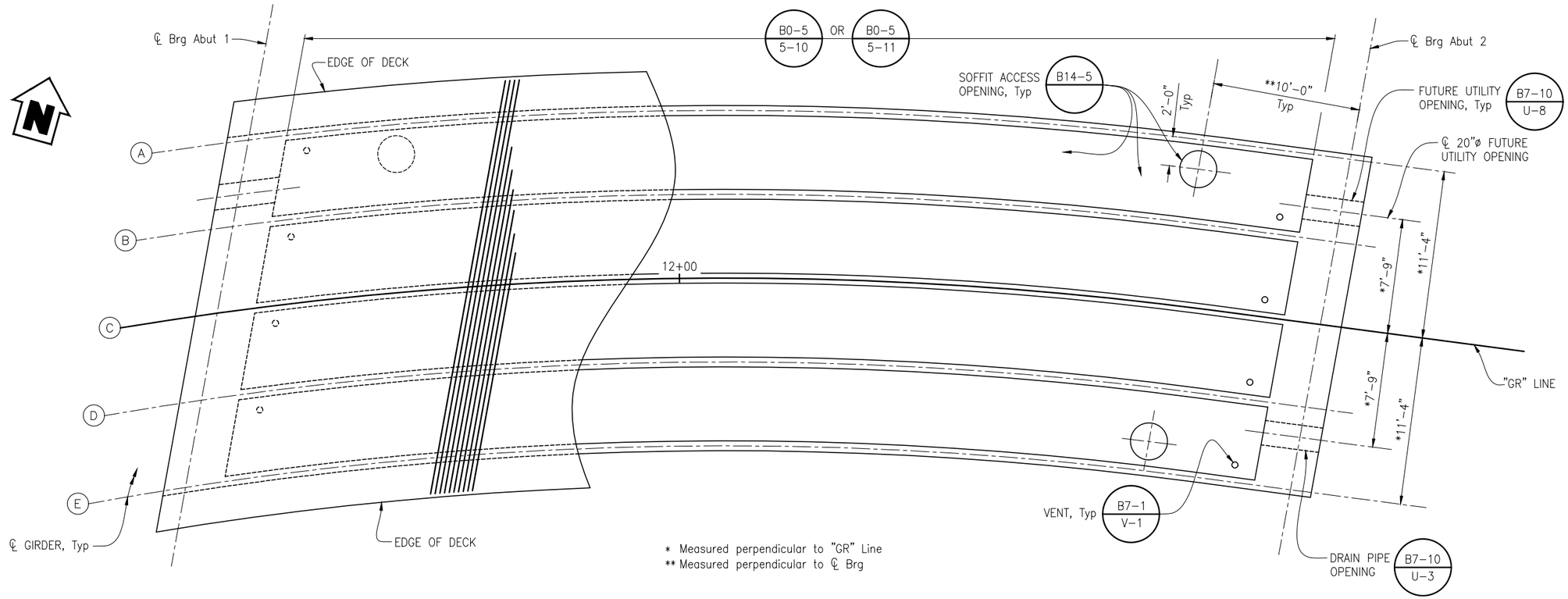

GIRDER LAYOUT

1/4"=1'-0"

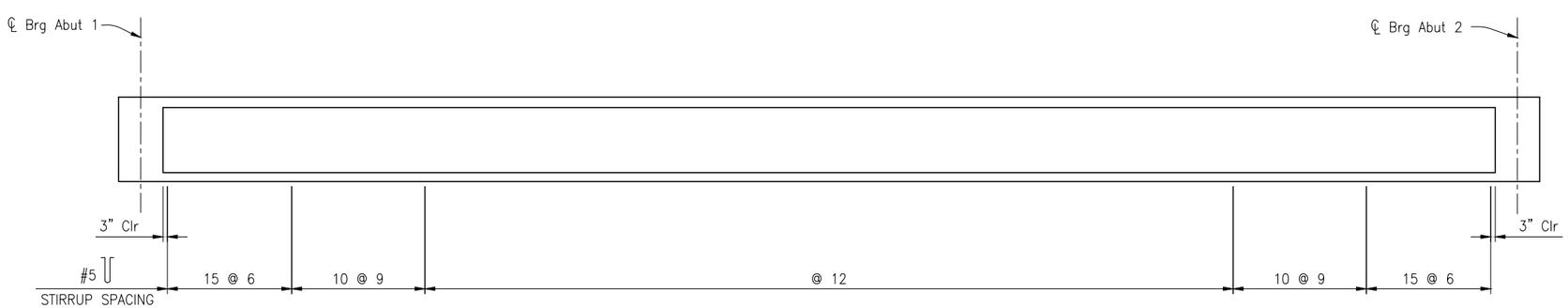

LONGITUDINAL SECTION

1/4"=1'-0"

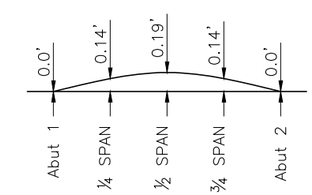

(DOES NOT INCLUDE ALLOWANCE FOR FALSEWORK SETTLEMENT)

CAMBER DIAGRAM

NO SCALE

NOTES:

1. For bottom longitudinal reinforcement, see "GIRDER REINFORCEMENT" sheet.

B-12

DESIGN BY	T. ARCAYA	REGISTERED CIVIL ENGINEER	CONSTRUCTION COMPLETED: "AS BUILT" INFORMATION TO BE COMPLETED AFTER CONSTRUCTION	TRC 10680 White Rock Rd., Suite 100 Rancho Cordova, California 95670	COUNTY OF SONOMA DEPARTMENT OF TRANSPORTATION & PUBLIC WORKS JOHANNES HOEVERTSZ, P.E., DIRECTOR	GIRDER LAYOUT	BRIDGE NUMBER 20C0600
DRAWING BY	A. CARDOZA	January 24, 2025 PLANS APPROVAL DATE	RESIDENT ENGINEER AS BUILT DRAWINGS BY:			GEYSERS ROAD BRIDGE OVER FRASIER CREEK REPLACEMENT PROJECT	BUDGET NUMBER C11005
CHECKED BY	M. FUSTOK	FILENAME: 04_20C05XX-L-G_L001.DWG	DATE / REVISION / BY / APPROVED	ORIGINAL SCALE IN INCHES FOR REDUCED PLANS 0 1 2 3			FISCAL YEAR 2024-25
							SHEET NUMBER 34
							TOTAL SHEETS 41

REGISTERED PROFESSIONAL ENGINEER CAMERON J. PINKERTON No. 73288 Exp. 12/31/26 CIVIL STATE OF CALIFORNIA

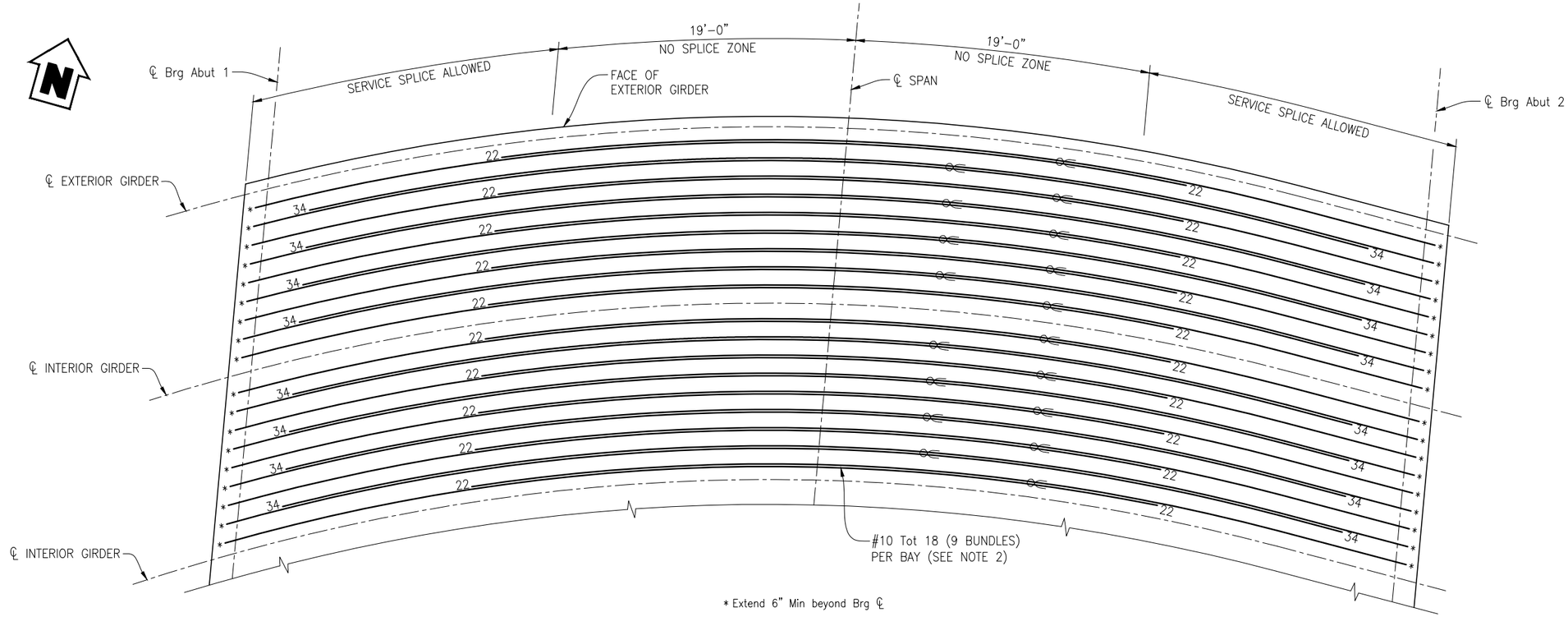

ADDITIONAL BOTTOM SLAB REINFORCEMENT

NO SCALE
(SCALE EXAGGERATED)

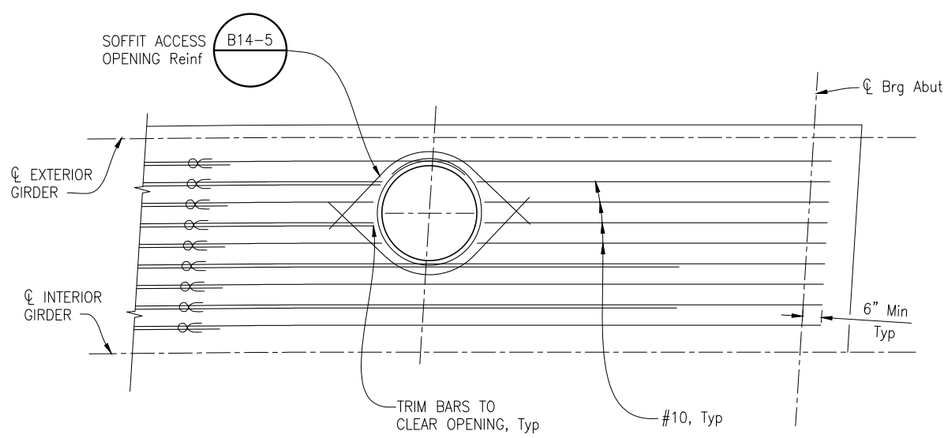

SOFFIT ACCESS OPENING DETAIL

1/2" = 1'-0"

NOTES:

1. Splices in additional reinforcement shall be Service Splices.
2. Place longitudinal steel parallel and space normal to "GR" Line.
3. Number at end of bar indicates length in feet from ℄ Span respectively.

LEGEND:

⊂⊂ Indicates bundled bars

B-13

DESIGN BY	T. ARCAYA	REGISTERED CIVIL ENGINEER	CONSTRUCTION COMPLETED:	TRC 10680 White Rock Rd., Suite 100 Rancho Cordova, California 95670	COUNTY OF SONOMA DEPARTMENT OF TRANSPORTATION & PUBLIC WORKS JOHANNES HOEVERTSZ, P.E., DIRECTOR	GIRDER REINFORCEMENT	BRIDGE NUMBER 20C0600
DRAWING BY	G. IMBSEN	January 24, 2025	"AS BUILT" INFORMATION TO BE COMPLETED AFTER CONSTRUCTION	RESIDENT ENGINEER AS BUILT DRAWINGS BY:		GEYSERS ROAD BRIDGE OVER FRASIER CREEK REPLACEMENT PROJECT	BUDGET NUMBER C11005
CHECKED BY	M.FUSTOK	PLANS APPROVAL DATE	DATE / REVISION / BY / APPROVED	ORIGINAL SCALE IN INCHES FOR REDUCED PLANS 0 1 2 3			FISCAL YEAR 2024-25
		FILENAME: 04_20C05XX-L-G_L002.DWG					SHEET NUMBER 35
		REGISTERED PROFESSIONAL ENGINEER CAMERON J. PINKERTON No. 73288 Exp. 12/31/26 CIVIL STATE OF CALIFORNIA					TOTAL SHEETS 41

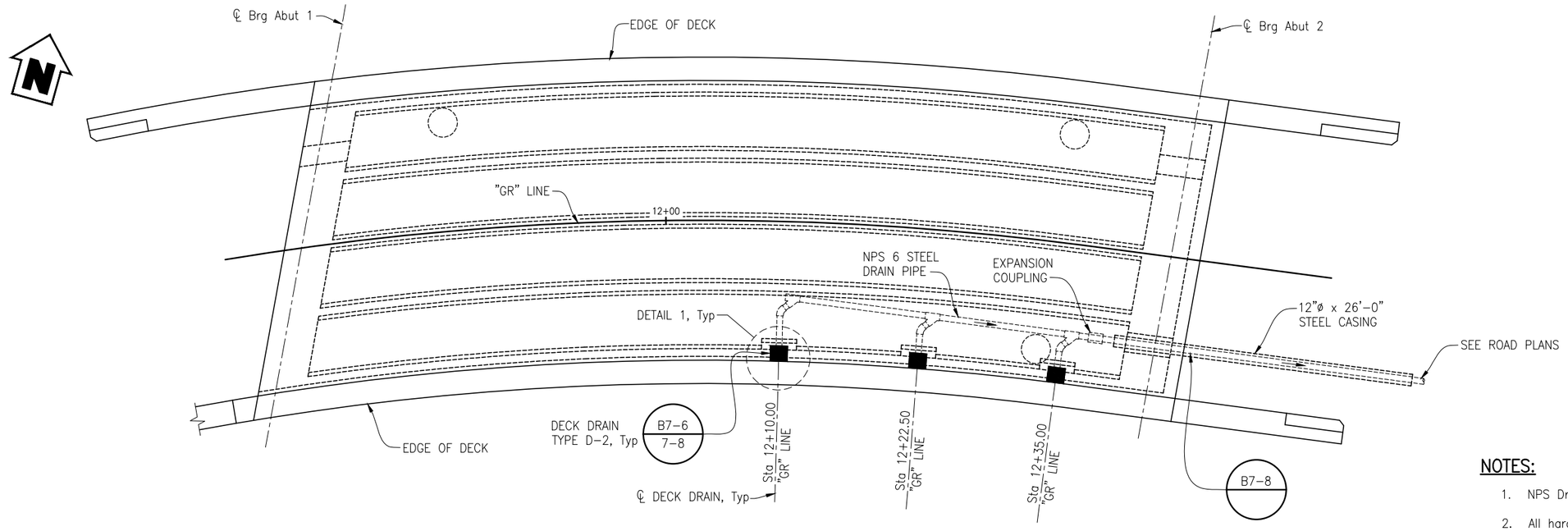

PLAN
3/16"=1'-0"

NOTES:

1. NPS Drain Pipe – 2% slope minimum.
2. All hardware must be galvanized.
3. Provide WYE connection at each drain.

LEGEND:

■ Indicates Deck Drain Type D-2 (B7-6 / 7-8) (B7-8)

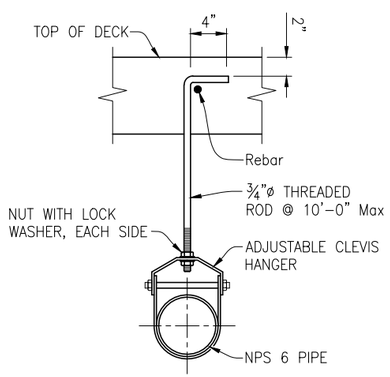

PIPE HANGER
NO SCALE

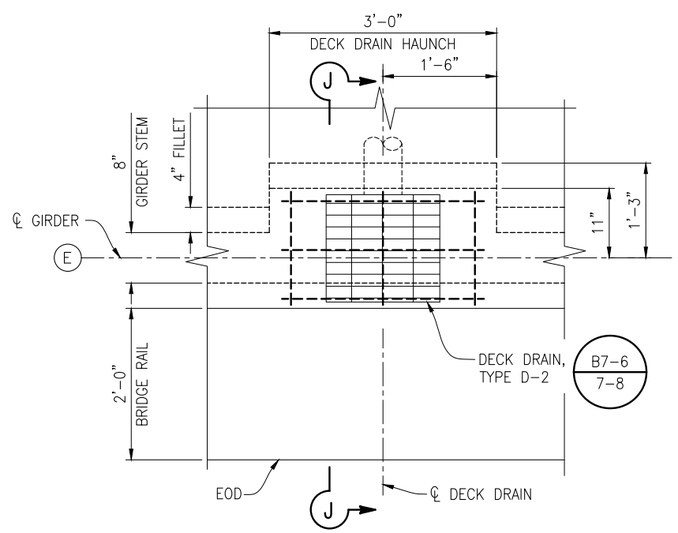

DETAIL 1
1"=1'-0"

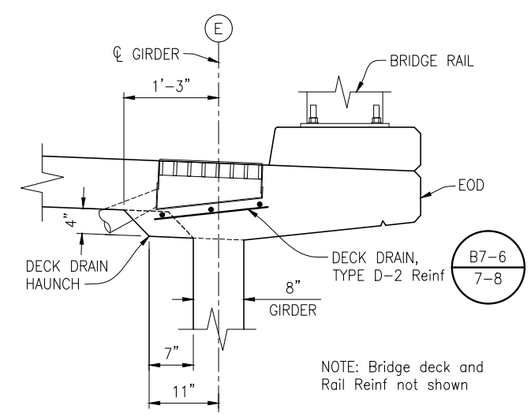

SECTION J-J
1"=1'-0"

B-14

DESIGN BY	T. ARCAYA	REGISTERED CIVIL ENGINEER	CONSTRUCTION COMPLETED: "AS BUILT" INFORMATION TO BE COMPLETED AFTER CONSTRUCTION RESIDENT ENGINEER AS BUILT DRAWINGS BY:	TRC 10680 White Rock Rd., Suite 100 Rancho Cordova, California 95670	COUNTY OF SONOMA DEPARTMENT OF TRANSPORTATION & PUBLIC WORKS JOHANNES HOEVERTSZ, P.E., DIRECTOR	DECK DRAINAGE DETAILS	BRIDGE NUMBER 20C0600
DRAWING BY	A. CARDOZA	January 24, 2025 PLANS APPROVAL DATE	DATE / REVISION / BY / APPROVED			GEYSERS ROAD BRIDGE OVER FRASIER CREEK REPLACEMENT PROJECT	BUDGET NUMBER C11005
CHECKED BY	M. FUSTOK	FILENAME: 04_20C05XX-R-DD01.DWG		ORIGINAL SCALE IN INCHES FOR REDUCED PLANS 0 1 2 3			FISCAL YEAR 2024-25
		REGISTERED PROFESSIONAL ENGINEER CAMERON J. PINKERTON No. 73288 Exp. 12/31/26 CIVIL STATE OF CALIFORNIA					SHEET NUMBER 36
							TOTAL SHEETS 41

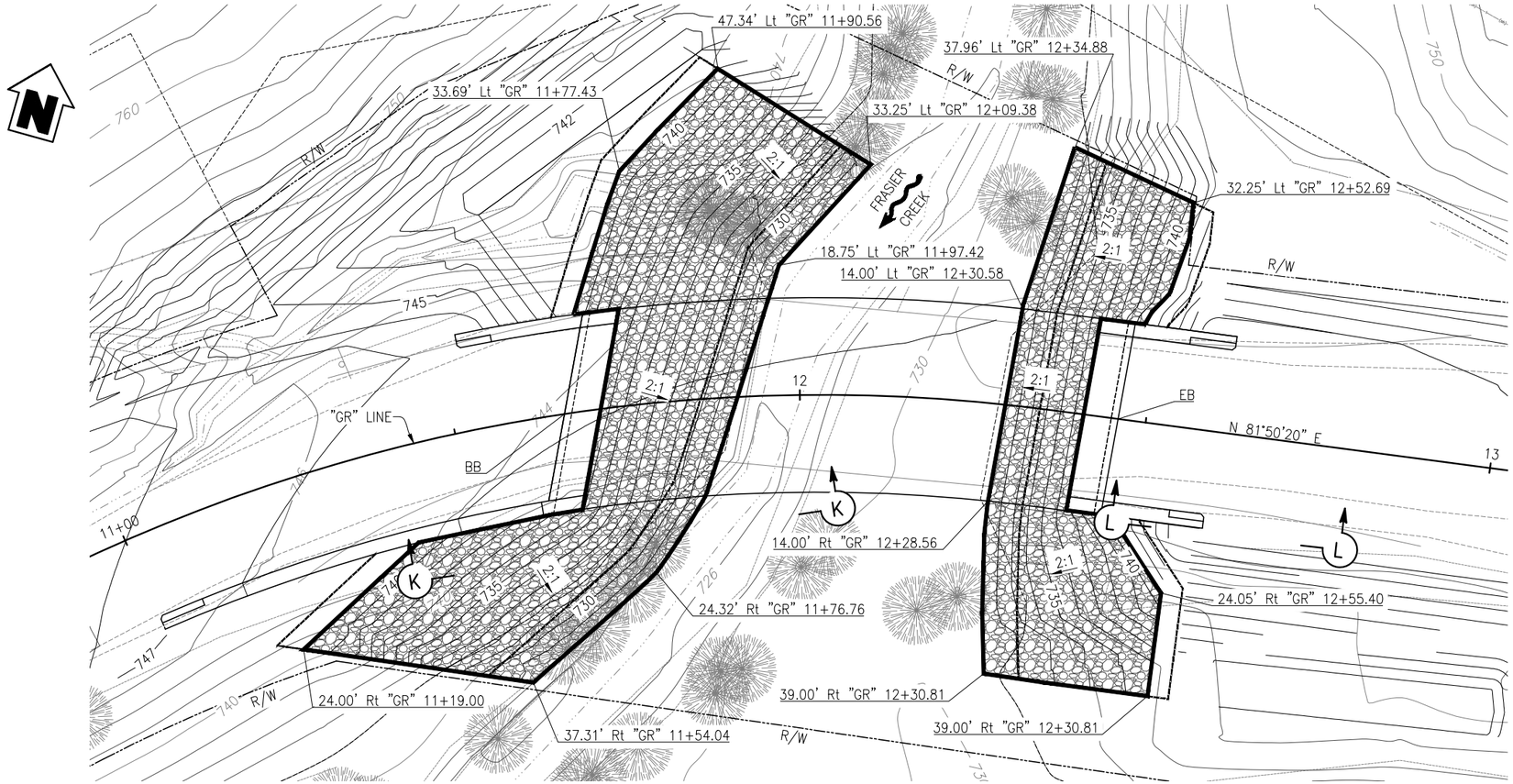

PLAN

1"=10'

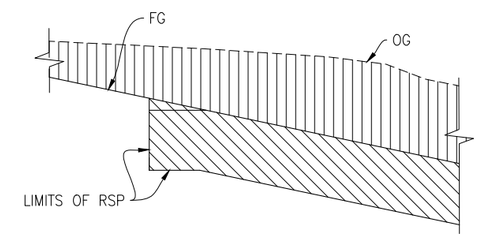

LEGEND:

- ROADWAY EXCAVATION
- STRUCTURE EXCAVATION (ROCK SLOPE PROTECTION)

EXCAVATION

NO SCALE

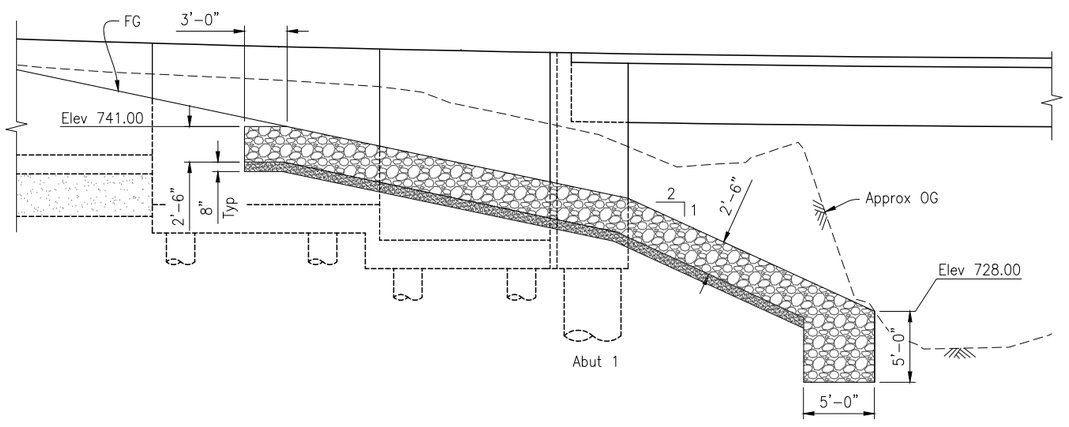

SECTION K-K

3/16"=1'-0"

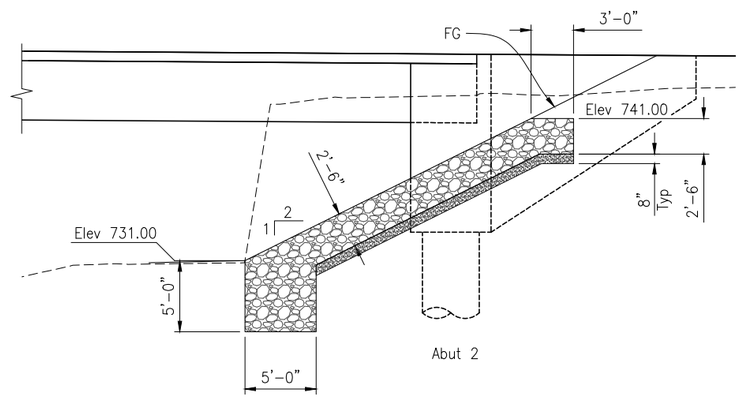

SECTION L-L

3/16"=1'-0"

NOTE:

1. For revegetation, see "PLANTING PLAN" sheet.

LEGEND:

- DIRECTION OF WATER FLOW
- RSP (300 LB, CLASS IV, METHOD B)
- GRAVEL FILTER

B-15

DESIGN BY	T. ARCAYA
DRAWING BY	A. CARDOZA
CHECKED BY	M. FUSTOK

REGISTERED CIVIL ENGINEER
January 24, 2025
PLANS APPROVAL DATE

REGISTERED PROFESSIONAL ENGINEER CAMERON J. PINKERTON No. 73288 Exp. 12/31/26 CIVIL STATE OF CALIFORNIA

FILENAME: 04_20C05XX-U-MISCDT01-RSP02.DWG

CONSTRUCTION COMPLETED:
"AS BUILT" INFORMATION TO BE COMPLETED AFTER CONSTRUCTION
RESIDENT ENGINEER
AS BUILT DRAWINGS BY:

DATE	REVISION	BY	APPROVED

TRC
10680 White Rock Rd., Suite 100
Rancho Cordova, California 95670

ORIGINAL SCALE IN INCHES FOR REDUCED PLANS 0 1 2 3

COUNTY OF SONOMA
DEPARTMENT OF TRANSPORTATION & PUBLIC WORKS
JOHANNES HOEVERTSZ, P.E., DIRECTOR

ROCK SLOPE PROTECTION

GEYSERS ROAD BRIDGE OVER FRASIER CREEK REPLACEMENT PROJECT

BRIDGE NUMBER	20C0600
BUDGET NUMBER	C11005
FISCAL YEAR	2024-25
SHEET NUMBER	37
TOTAL SHEETS	41

Drawing name: H:\214336 Frasier Creek - Sonoma County\Structures\04_20C05XX-u-miscdt01-rsp02.dwg Layout Tab: PLAN & ELEV Jan 16,2025 - 4:08pm gimbsen

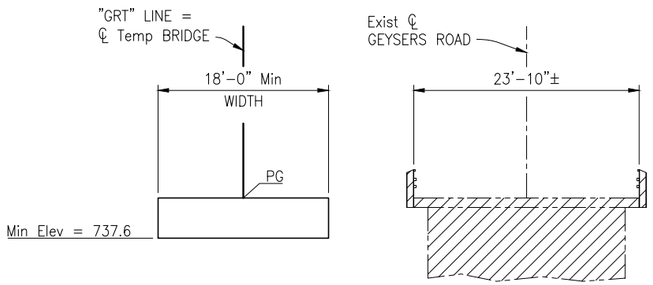

NOTE: Temp BRIDGE RAILING NOT SHOWN.

NOTE: NEW BRIDGE NOT SHOWN.

TYPICAL SECTION

1/8"=1'-0"

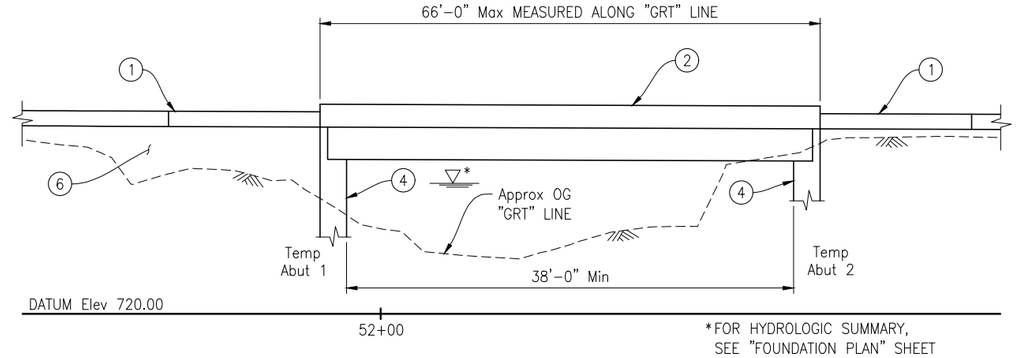

NOTE: SEE ROAD PLANS FOR PROFILE

DEVELOPED ELEVATION

1"=10'

NOTES:

1. Partial removal of existing wingwall will be required to construct the temporary alignment.

(1) Temporary K-rail, see ROAD PLANS

(2) Temporary bridge to be designed by the Contractor

(3) Temporary retaining wall to be designed by the Contractor

(4) Temporary abutment to be designed by the Contractor

(5) For detour road, see ROAD PLANS

(6) Temporary embankment

(7) Temporary shoring to be designed by the Contractor

LEGEND:

Indicates Exist Structure

Indicates Bridge Removal (Portion)

Indicates Direction of Flow

Indicates Direction of Traffic

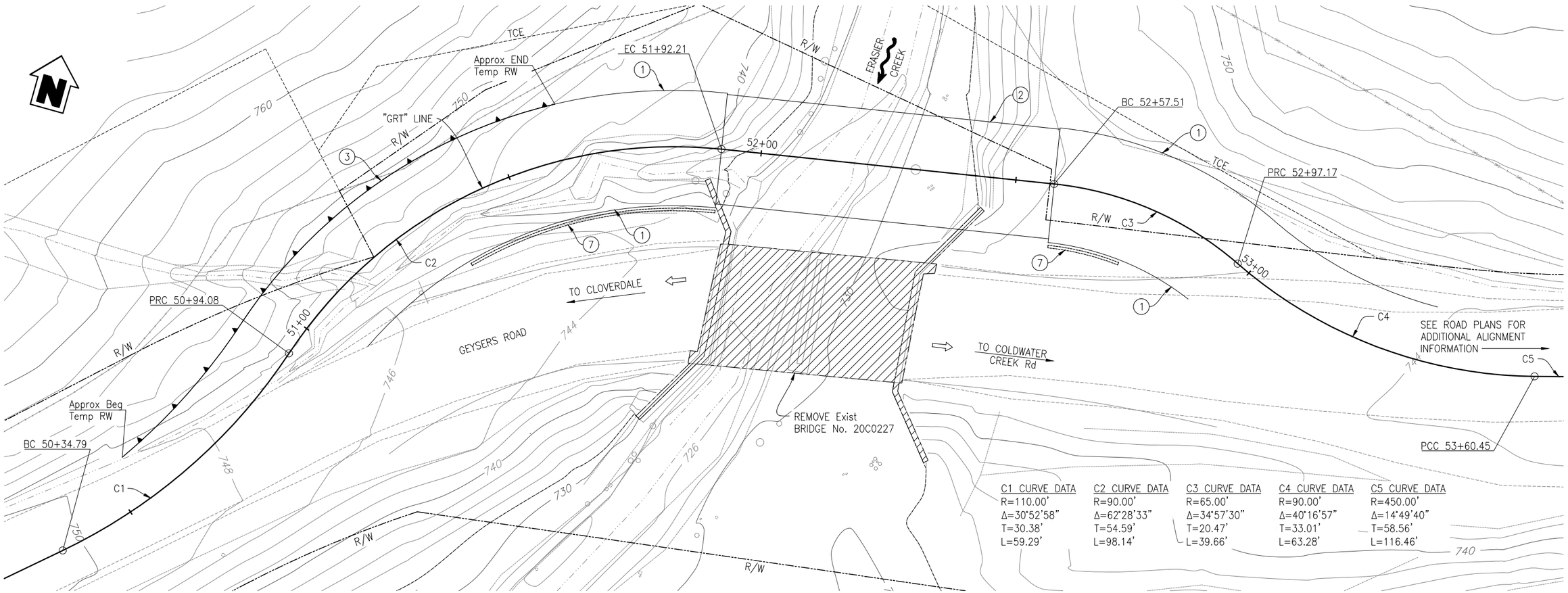

C1 CURVE DATA	C2 CURVE DATA	C3 CURVE DATA	C4 CURVE DATA	C5 CURVE DATA
R=110.00'	R=90.00'	R=65.00'	R=90.00'	R=450.00'
Δ=30°52'58"	Δ=62°28'33"	Δ=34°57'30"	Δ=40°16'57"	Δ=14°49'40"
T=30.38'	T=54.59'	T=20.47'	T=33.01'	T=58.56'
L=59.29'	L=98.14'	L=39.66'	L=63.28'	L=116.46'

PLAN

1"=10'

B-16

DESIGN BY	T. ARCAYA
DRAWING BY	A. CARDOZA
CHECKED BY	M. FUSTOK

REGISTERED CIVIL ENGINEER
January 24, 2025
PLANS APPROVAL DATE

REGISTERED PROFESSIONAL ENGINEER CAMERON J. PINKERTON No. 73288 Exp. 12/31/26 CIVIL STATE OF CALIFORNIA

FILENAME: 04_20C05XX-U-MISCDT06-TEMPBRIDGE01.DWG

CONSTRUCTION COMPLETED:
"AS BUILT" INFORMATION TO BE COMPLETED AFTER CONSTRUCTION
RESIDENT ENGINEER
AS BUILT DRAWINGS BY:

DATE	REVISION	BY	APPROVED

TRC
10680 White Rock Rd.,
Suite 100
Rancho Cordova, California 95670

ORIGINAL SCALE IN INCHES FOR REDUCED PLANS 0 1 2 3

TRANSPORTATION & PUBLIC WORKS "Getting you there!" SONOMA COUNTY

COUNTY OF SONOMA
DEPARTMENT OF TRANSPORTATION & PUBLIC WORKS
JOHANNES HOEVERTSZ, P.E., DIRECTOR

TEMPORARY DETOUR

GEYSERS ROAD BRIDGE OVER FRASIER CREEK REPLACEMENT PROJECT

BRIDGE NUMBER	20C0600
BUDGET NUMBER	C11005
FISCAL YEAR	2024-25
SHEET NUMBER	38
TOTAL SHEETS	41

Drawing name: H:\214336 Frasier Creek - Sonoma County\Structures\04_20C05XX-u-miscdt06-tempbridge01.dwg Layout Tab: Layout1 Jan 16,2025 - 4:38pm gimbsen

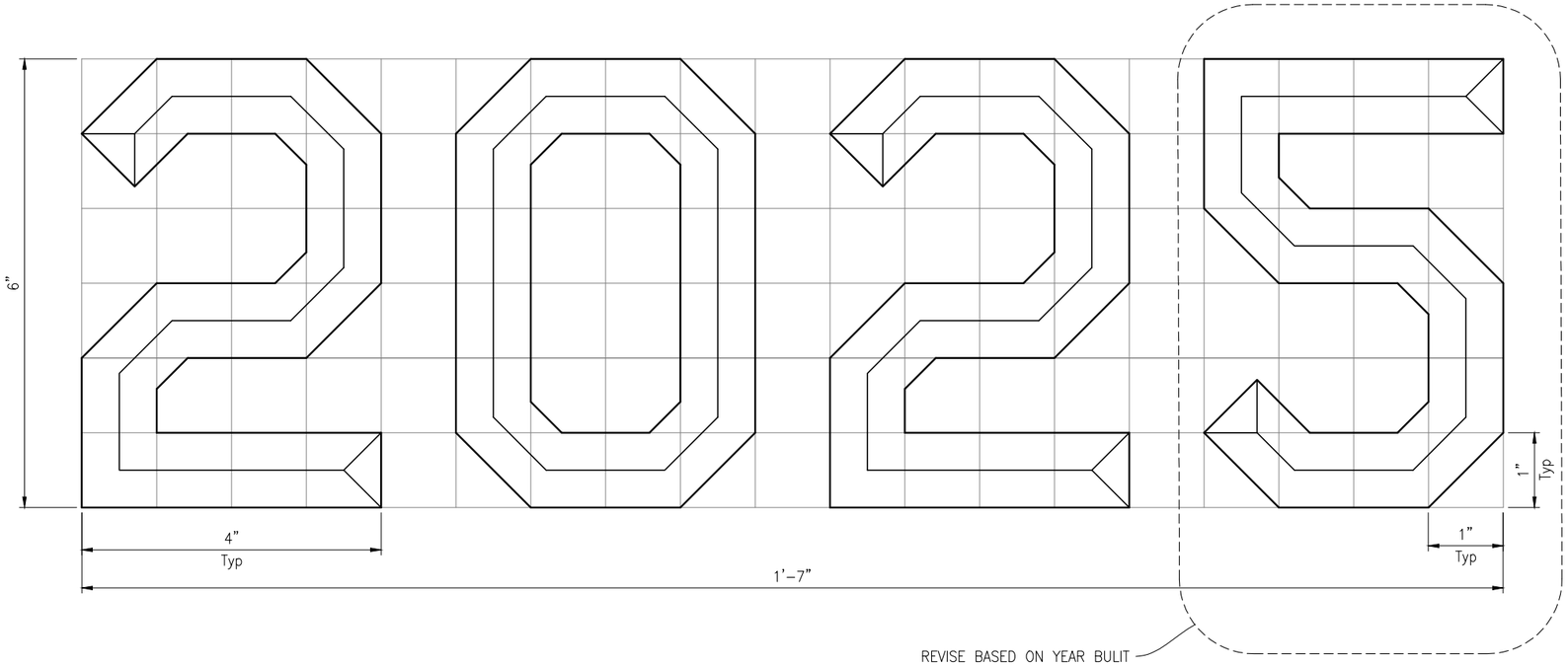

ELEVATION
1:1

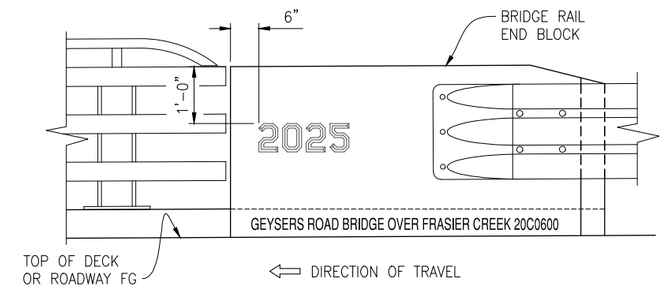

ELEVATION
3/4" = 1'-0"

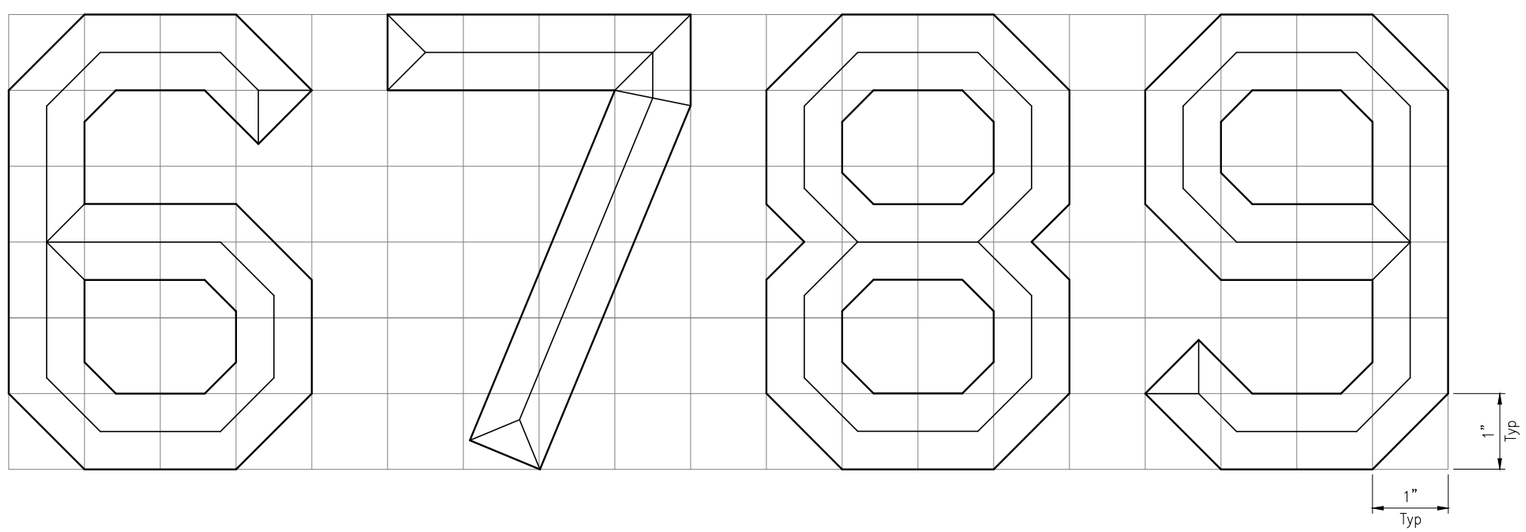

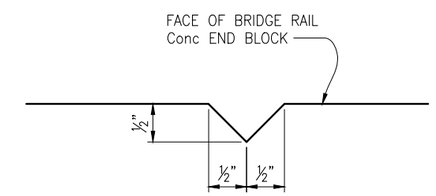

TYPICAL SECTION
1:1

DESIGN BY	T. ARCAYA	REGISTERED CIVIL ENGINEER	CONSTRUCTION COMPLETED:	TRC 10680 White Rock Rd., Suite 100 Rancho Cordova, California 95670	COUNTY OF SONOMA DEPARTMENT OF TRANSPORTATION & PUBLIC WORKS JOHANNES HOEVERTSZ, P.E., DIRECTOR	BRIDGE RAIL – EMBOSSED YEAR BUILT
DRAWING BY	G. IMBSEN	January 24, 2025	"AS BUILT" INFORMATION TO BE COMPLETED AFTER CONSTRUCTION	RESIDENT ENGINEER AS BUILT DRAWINGS BY:		GEYSERS ROAD BRIDGE OVER FRASIER CREEK REPLACEMENT PROJECT
CHECKED BY	M. FUSTOK	PLANS APPROVAL DATE	DATE / REVISION / BY / APPROVED	ORIGINAL SCALE IN INCHES FOR REDUCED PLANS 0 1 2 3		

FILENAME: 04_20C0600-V-YEAR.DWG

REGISTERED PROFESSIONAL ENGINEER CAMERON J. PINKERTON No. 73288 Exp. 12/31/26 CIVIL STATE OF CALIFORNIA

BRIDGE NUMBER	20C0600
BUDGET NUMBER	C11005
FISCAL YEAR	2024-25
SHEET NUMBER	39
TOTAL SHEETS	41

Drawing name: H:\214336 Frasier Creek - Sonoma County\Structures\04_20C0600-v-year.dwg Layout Tab: YEAR Jan 16,2025 - 4:40pm gimbsen

NOTES:
1. This Test Boring Layout sheet was prepared in accordance with the Caltrans Soil & Rock Logging, Classification, and Presentation Manual (2022 Edition).
2. See 2023 Caltrans Standard Plans A10F and A10F for Soil Legend, and A10 for Rock Legend.

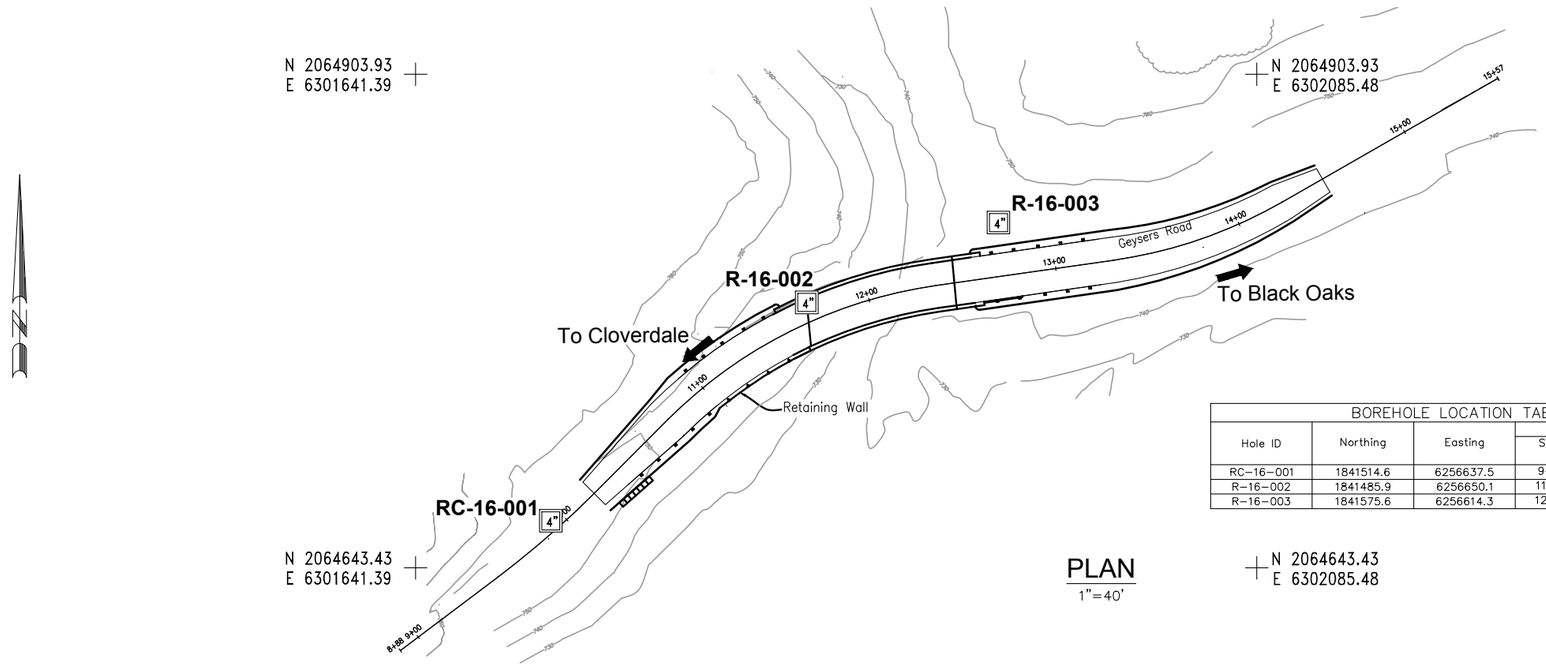

PLAN
1"=40'

BOREHOLE LOCATION TABLE

Hole ID	Northing	Easting	"GR" Line Station	"GR" Line Offset (ft)	"GR" Line Rt/Lt
RC-16-001	1841514.6	6256637.5	9+93.7	4.7	Lt
R-16-002	1841485.9	6256650.1	11+69.0	9.9	Lt
R-16-003	1841575.6	6256614.3	12+73.4	28.0	Lt

B-18

DESIGN BY	K. LEWIS
DRAWING BY	M. WESTBROOK
CHECKED BY	E. NICHOLS

REGISTERED CIVIL ENGINEER
January 24, 2025
PLANS APPROVAL DATE
FILENAME: 16-300.1 LOTB.DWG

REGISTERED PROFESSIONAL ENGINEER KEIKO K. LEWIS No. 89543 CIVIL STATE OF CALIFORNIA

CONSTRUCTION COMPLETED:
"AS BUILT" INFORMATION TO BE COMPLETED AFTER CONSTRUCTION
RESIDENT ENGINEER
AS BUILT DRAWINGS BY:

DATE	REVISION	BY	APPROVED

Crawford & Associates, Inc.
Geotechnical Engineering, Design and Construction Services

ORIGINAL SCALE IN INCHES FOR REDUCED PLANS 0 1 2 3

COUNTY OF SONOMA
DEPARTMENT OF TRANSPORTATION & PUBLIC WORKS
JOHANNES HOEVERTSZ, P.E., DIRECTOR

TEST BORING LAYOUT

GEYSERS ROAD BRIDGE OVER
FRASIER CREEK
REPLACEMENT PROJECT

BRIDGE NUMBER	20C0600
BUDGET NUMBER	C11005
FISCAL YEAR	2024-25
SHEET NUMBER	40
TOTAL SHEETS	41

Drawing name: Z:\Shared\Projects\16-300.1 Geysers Road Bridge at Frasier Creek (2013-0038)\CAD\Inprogress Drawings\Edited Client Border template 10-01-2024\LOTB 11x17\DWG\16-300.1 LOTB - Copy.dwg Layout Tab: Test Boring Layout Dec 19,2024 - 12:37pm bencr

BENCH MARK
Elevation = 881.14' Being the top of a 4" diameter Brass Disk stamped "US Department Of Interior, US Geologic Survey, Elev 879 Ft Above Sea Level" located on the top of middle of the southwesterly concrete headwall of the existing Big Sulphur Creek Bridge.
Vertical Datum: NAVD 1988.

NOTES:
1. Field classification of soils was in accordance with the Caltrans Soil & Rock Logging, Classification, and Presentation Manual (2010).
2. This LOTB sheet was prepared in accordance with the Caltrans Soil & Rock Logging, Classification, and Presentation Manual (2022 Edition).
3. Standard Penetration tests were performed in accordance with ASTM D 1586 using a hammer operated with an automated drop system. Drill rods were 1 5/8-inch diameter "A"-rods; sampler was driven with brass liners.
4. If laboratory tests are not shown as being performed, the descriptions presented on the LOTB are based solely on the visual practices described in this Manual.
5. The length of each sampled interval is shown graphically on the boring log. Whole number blow counts ("N") represent the "standard penetration resistance" interval in accordance with the Caltrans Soil & Logging, Classification, and Presentation Manual (2022 Edition). Where less than 0.5 feet of penetration is achieved, the blow count shown is for that fraction of the "standard penetration resistance" interval actually penetrated.
6. Consistency and density of soils shown in ( ) where estimated.
7. Static groundwater levels were not determined in the test borings RC-16-001, R-16-002, and R-16-003 due to the presence of residual drilling fluid.
8. Groundwater was not encountered in the augered portions of the borings.

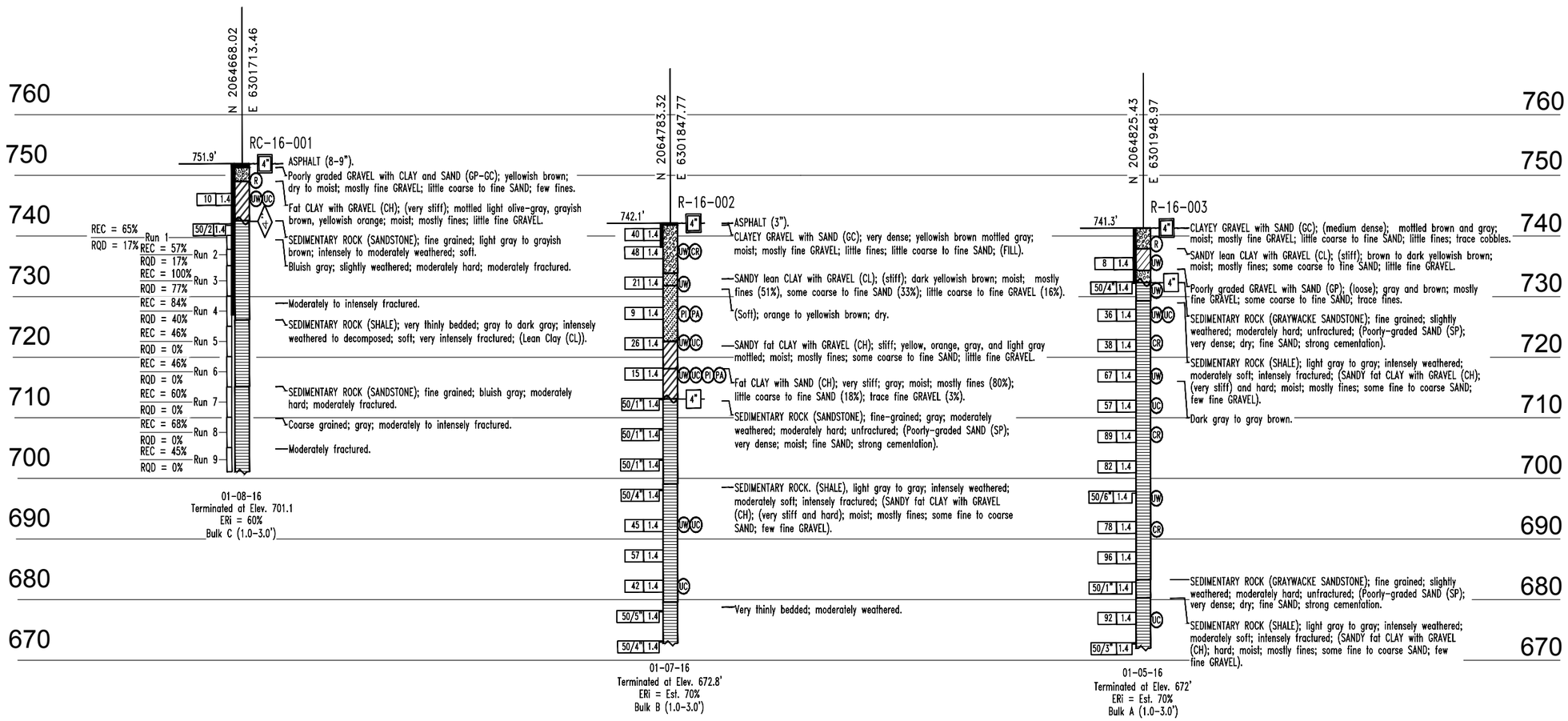

PROFILE

HOR. : No Scale
VERT. 1"= 10'

B-19

DESIGN BY	K. LEWIS
DRAWING BY	M. WESTBROOK
CHECKED BY	E. NICHOLS

REGISTERED CIVIL ENGINEER
January 24, 2025
PLANS APPROVAL DATE
FILENAME: 16-300.1 LOTB.DWG

REGISTERED PROFESSIONAL ENGINEER KEIKO K. LEWIS No. 89543 CIVIL STATE OF CALIFORNIA

"AS BUILT" INFORMATION TO BE COMPLETED AFTER CONSTRUCTION
CONSTRUCTION COMPLETED:
RESIDENT ENGINEER
AS BUILT DRAWINGS BY:

DATE	REVISION	BY	APPROVED

Crawford & Associates, Inc.
Geotechnical Engineering, Design and Construction Services

ORIGINAL SCALE IN INCHES FOR REDUCED PLANS 0 1 2 3

COUNTY OF SONOMA
DEPARTMENT OF TRANSPORTATION & PUBLIC WORKS
JOHANNES HOEVERTSZ, P.E., DIRECTOR

LOG OF TEST BORING 1 OF 1

GEYSERS ROAD BRIDGE OVER FRASIER CREEK REPLACEMENT PROJECT

BRIDGE NUMBER	20C0600
BUDGET NUMBER	C11005
FISCAL YEAR	2024-25
SHEET NUMBER	41
TOTAL SHEETS	41

Drawing name: Z:\Shared\Projects\16-300.1 Geysers Road Bridge at Frasier Creek (2013-0038)\CAD\Inprogress Drawings\Edited Client Border template 10-01-2024\LOTB 11x17\DWG\16-300.1 LOTB.dwg Layout Tab: LOTB Dec 19,2024 - 10:10am bencr